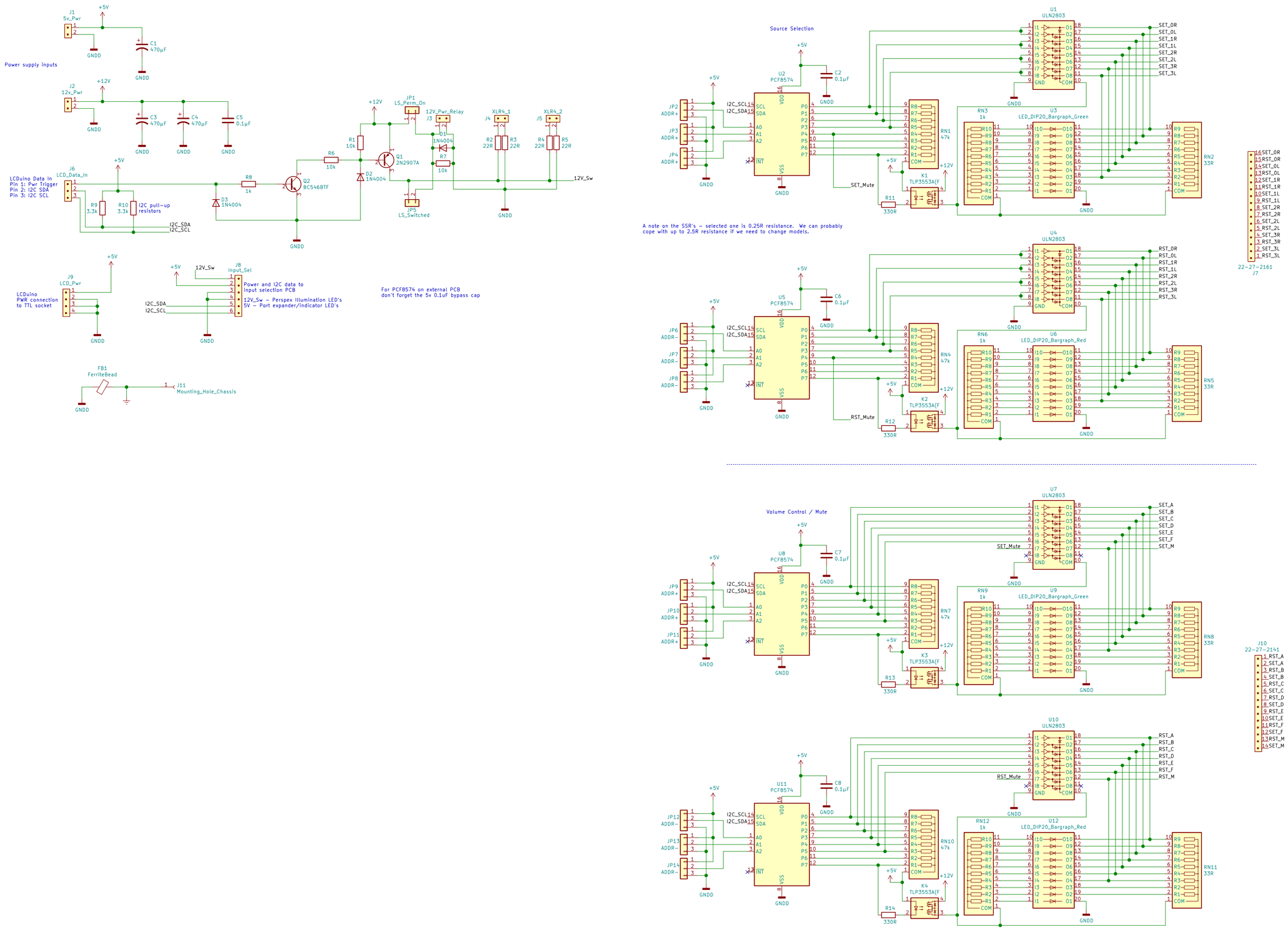

Sheet: /
File: New_Control_Unit_2022_Relay_Driver.sch

Title:

Size: A2	Date:	Rev:
KiCad E.D.A. kicad (5.1.10-1-10_14)		Id: 1/1