Journal of Contemporary Educational Research

Editor-in-Chief

Jandhyala B. G. Tilak

Council for Social Development, New Delhi

BIO-BYWORD SCIENTIFIC PUBLISHING PTY LTD
(619 649 400)
Level 10
50 Clarence Street
SYDNEY NSW 2000
Copyright © 2023. Bio-Byword Scientific Publishing Pty Ltd.
Complimentary Copy

ISSN (ONLINE): 2208-8474
ISSN (PRINT): 2208-8466

Journal of Contemporary Educational Research

Focus and Scope

Journal of Contemporary Educational Research is an international, peer-reviewed and open access journal which is to promote the evaluative, integrative, theoretical and methodological research on contemporary education; shape a novel, broader view of issues in contemporary education; enhance the caliber of humanities research through active use of best domestic and foreign practices; and integrate the achievements of various sciences and knowledge areas with unconventional approaches.

All relevant papers are carefully considered, vetted by a distinguished team of international experts, and rapidly published. Original articles, short communications, case studies and comprehensive review articles can be submitted online via the journal's submission and peer review site.

About Publisher

Bio-Byword Scientific Publishing is a fast-growing, peer-reviewed and open access journal publisher, which is located in Sydney, Australia. As a dependable and credible corporation, it promotes and serves a broad range of subject areas for the benefit of humanity. By informing and educating a global community of scholars, practitioners, researchers and students, it endeavors to be the world's leading independent academic and professional publisher. To realize it, it keeps creative and innovative to meet the range of the authors' needs and publish the best of their work.

By cooperating with University of Sydney, University of New South Wales and other world-famous universities, Bio-Byword Scientific Publishing has established a huge publishing system based on hundreds of academic programs, and with a variety of journals in the subjects of medicine, construction, education and electronics.

Publisher Headquarter

BIO-BYWORD SCIENTIFIC PUBLISHING PTY LTD
Level 10
50 Clarence Street
Sydney NSW 2000
Website: www.bbwpublisher.com
Email: info@bbwpublisher.com

Table of Contents

1 **Integration of Ideological and Political Education into Student Management by Higher Vocational Counselors**
Yu Yuan

7 **Research on the Intelligent Distribution System of College Dormitory Based on the Decision Tree Classification Algorithm**
Huiping Han, Beida Wang

15 **Research on the Training of Interdisciplinary-Based Intelligent Manufacturing Talents**
Yuan Qin, Meng Wang, Mei Li

23 **The Role of Skills Competitions in Improving the Practical Ability of Vocational College Students**
Shang Wang, Fei Peng, Zhixin Feng

29 **Effectiveness of Oral English Blended Teaching Supported by Digital Technology in Universities**
Zhonger Wang, Nurliyana Bukhari, Yang Han, Qi Tang

37 **Ideological and Political Teaching Case Design and Research Based on the Course Simulation Electronic Technology Experiment**
Meiyi Chen, Wei Yang, Xin Hao, Shunyu Long, Pengfei Zhong

Call for papers – Journal of Contemporary Educational Research

ISSN (Online): 2208-8474
ISSN (Print): 2208-8466

Submission open for March - 2023

Dear Researchers,

Journal of Contemporary Educational Research is an international, peer-reviewed and open access journal which is to promote the evaluative, integrative, theoretical, and methodological research on contemporary education; shape a novel, broader view of issues in contemporary education; enhance the caliber of humanities research through active use of best domestic and foreign practices; and integrate the achievements of various sciences and knowledge areas with unconventional approaches.

All relevant papers are carefully considered, vetted by a distinguished team of international experts, and rapidly published. Original articles, short communications, case studies and comprehensive review articles can be submitted online via the journal's submission and peer review site.

The *Journal of Contemporary Educational Research* is published by Bio-Byword Scientific Publishing Company, it is a fast growing peer-reviewed and open access journal publisher, which is located in Sydney, Australia. As a dependable and credible corporation, it promotes and serves a broad range of subject areas such as medicine, construction, education, and electronics for the benefit of humanity. By informing and educating a global community of scholars, practitioners, researchers, and students, it endeavors to be the world's leading independent academic and professional publisher.

All Bio-Byword journals are free from all access barriers, allowing for the widest possible global dissemination of their manuscripts and highest possible citations. Bio-Byword publisher online submission will go through a rapid peer review and production, making the process of publishing simpler and more efficient, which benefit from its user-friendly online submission system that reduces the overall time from submission to publication.

Acceptance Notification: Within 21 days from the date of manuscript submission

Send your manuscript to the editor at: **info@bbwpublisher.com**

With Warm Regards,
Editor-in-Chief
Prof. Jandhyala B. G. Tilak
Journal of Contemporary Educational Research

Journal of Contemporary Educational Research, 2023, Volume 7, Issue 2
http://ojs.bbwpublisher.com/index.php/JCER
ISSN Online: 2208-8474
ISSN Print: 2208-8466

Integration of Ideological and Political Education into Student Management by Higher Vocational Counselors

Yu Yuan*

Zibo Vocational Institute, Zibo 255314, Shandong Province, China

Corresponding author: Yu Yuan, 330156076@qq.com

Copyright: © 2023 Author(s). This is an open-access article distributed under the terms of the Creative Commons Attribution License (CC BY 4.0), permitting distribution and reproduction in any medium, provided the original work is cited.

Abstract: In order to give full play to the role and value of higher vocational counselors in student management and improve the student management level, this paper analyzes the situation of higher vocational student management development and points out the role of ideological and political education in higher vocational student management as well as the effective strategies to integrate ideological and political education into higher vocational student management, so as to provide reference for relevant personnel.

Keywords: Vocational college counselor; Student management; Ideological and political education

Online publication: January 17, 2023

1. Introduction

Higher vocational counselors play important roles in the academic lives of higher vocational students. Ideological and political education is one of the contents that must be integrated into the current education. In the student management work, integrated ideological and political education can effectively guide students in sorting out correct ideas and play a positive role by assisting higher vocational counselors to better manage higher vocational students. Ideological and political education in higher vocational college student management has extraordinary value, and this article mainly expounds the practical ways for integrating ideological and political education into student management.

2. New situation of student management in higher vocational colleges

2.1. Development of higher vocational colleges confronted by the new situation

The reform and change in the social demand for talents have put forward new challenges for the talent training mode of higher vocational colleges. In the process of development, higher vocational colleges should not only meet the needs for certain types of social talents, but also ensure the teaching characteristics and professional characteristics of the school. The combination of talent needs and professional characteristics has put forward new demands for the development of education in higher vocational colleges. In order to cultivate students and talents with better comprehensive quality, higher vocational colleges need to make further adjustments in their personnel training programs and educational resources to contribute to the response to national policies and development [1].

2.2. Evident impact of social ideology on students in higher vocational colleges

Higher vocational colleges, as the main platform to train professional talents for the society, are imperative in educational reform in the face of the ever-changing needs of talents in the society. However, higher vocational school students are easily influenced by social ideology, and national higher vocational education colleges are in a critical period of reform. The impact of the changes in ideological and political work, educational forms, and personnel training on higher vocational school students are evident. In the face of the ideological and political education policy and direction pointed out by the state, higher vocational colleges, under the influence of different informatization levels and the reform of ideological and political education system, should continuously emphasize on the functional value of ideological and political education, steadily exert the advantages of ideological and political education in the management of students in higher vocational colleges, stabilize the ideological consciousness of students in higher vocational colleges, as well as guide students in such a way to better adapt to the market changes, constantly improve their self-awareness, better work for the development of the society, and establish correct ideas, so as to achieve the purpose of talent training in higher vocational colleges [2].

2.3. Significant changes to the learning environment of higher vocational college students

With the development of electronic information technology and the internet, higher vocational college students have increased access to knowledge, and the speed of information transmission, especially in China, has reached a new height. However, in the face of diverse information on the internet, higher vocational students would inevitably be affected by negative information that may lead them astray while acquiring knowledge. In this context, ideological and political education plays an important role [3]. Higher vocational colleges in China are actively developing a new teaching mode using information technology, so that students can gain more knowledge and information by using information technology, and at the same time, they can choose to "follow" certain teachers based on their own preference [4]. In this environment, it is a prerequisite for vocational college students to have certain thought changes. The use of ideological and political education would help guide students to establish correct ideas in this complex information environment and maintain a normal state of mind as well as the correct three views.

3. Importance of integrating ideological and political education into the management of higher vocational counselors

3.1. Guide students to establish correct ideological concepts

The finite scope and limited time of ideological and political education in classrooms restrict the ideological and political education work. Vocational counselors should integrate ideological and political education into the daily management of students in order to understand the ideological and ideological dynamics of students, guide students in such a way to improve their self-awareness and establish the correct values and outlook on life with the best form of education [5-8]. Through the guidance of ideological and political education, students would not only retain their own personality, but also develop the right ideological attitude and gradually become individuals with self-awareness. The application of ideological and political education allows higher vocational counselors to achieve twice the result with half the effort. Higher vocational counselors are mainly responsible for all states outside the classroom of the students' office, and the guiding means of ideological and political education are more evident.

3.2. Guide students to cultivate professional ethics and sense of responsibility

The purpose of higher vocational education is to cultivate and provide ready-available talents for the development and innovation of the society. The training focus of higher vocational colleges is to cultivate a large number of talents needed for social infrastructure construction. A large number of talents are needed

for social infrastructure construction. This is the most basic component of social development. The educational responsibility of higher vocational colleges is to cultivate "five good" youth, guide students in such a way to establish patriotic thinking [9-11] and professional ethics, as well as to nurture students' sense of responsibility. There is a need for students to clarify their responsibilities in the society, formulate career goals, and strive for them to realize their life value. The application of ideological and political education in student management by higher vocational counselors can better guide students in establishing a sense of responsibility and clarifying correct moral concepts.

3.3. Improve the quality and efficiency of professional course learning

Ideological and political education is a type of education that cultivates core values and establishes socialist ideals and beliefs in students. A country will not have a future nor a nation, hope, if the younger generation does not have socialist ideals, skills, or a sense of responsibility. Guided by ideals and beliefs, vocational education and education for improving professional learning ability guide vocational college students to aim high and base themselves on the strategic heights of the country, society, and nation. Only in this way can they be focused on pursuing their own interests. Only when the younger generation firmly adheres to the historical mission of the "Chinese Dream" – the "great rejuvenation of the Chinese nation" – can they be down-to-earth in their professional learning, constantly improve their learning quality and efficiency, and advance their youthful dreams through the great practice of realizing the "Chinese Dream" [12,13].

4. Integration of ideological and political education into higher vocational counselors' student management work

4.1. Begin from their own management consciousness to improve their ideological cognition and give play to the value of ideological education

Higher vocational colleges should adapt to the reform, innovation, and development of education forms and systems as well as optimize their self-management awareness and teaching awareness. Counselors in higher vocational colleges, as administrators of students in schools, are alike parents. Higher vocational counselors should pay more attention to integrating the content of ideological and political education into student management, strengthen school student management, contribute to the creation of excellent campus culture, and actively awaken their self-awareness, clarify the role of ideological and political education in student management, recognize their self-positioning, and contemplate ways to integrate ideological and political education into student management. Higher vocational counselors should comprehensively analyze the current state of students according to the current situation of the school and education stage, make use of ideological education to carry out student management, implement ideological and political education in the management of students at all stages, and give full play to the value of ideological education [14].

4.2. Improve counselors' organization and deeply integrate ideological and political theories

As the "parents" of vocational college students in schools, counselors are responsible for the daily management of vocational college students, which has an important role in the stable and sustainable development of schools. The organization of counselors in vocational colleges requires improvement by recruiting more excellent counselors and conducting pre-job training for counselors. In the student management work, the team of vocational college counselors should deeply integrate ideological and political theories, combine ideological and political theories with practical work, and formulate different ideological and political education policies according to the development at different stages. At the same time, vocational college counselors need to be in touch with current affairs and political issues, master real-time key points, and share them with students to help students in personality construction and to establish

correct values [15]. In the in-depth integration of ideological and political theories, it is necessary to cultivate students' ability to solve problems and control their emotions, expand the depth and breadth of students' ideological understanding, guide students' development based on socialist core values, give full play to the value of ideological and political education, shape students' thoughts so that they are in line with the country's, and encourage students' to give back to the society.

4.3. Introduce new media technology and optimize the training of student cadre

4.3.1. Introduce new media technology

With the advancements in new media technology, higher vocational colleges should also follow the trend of the times, introduce new media technology, and give full play to the value of new media technology, such as using WeChat groups, QQ groups, *etc*., to achieve the development of integrated online and offline ideological education. Counselors should use new media technology to advance the application of new media technology, understand students' state of mind and current problems, and propose different solutions for different students [16]. At the same time, counselors should regularly share motivational images or videos to encourage students to optimize their self-awareness and think, thereby stabilizing their state of mind and guiding them in such a way to establish the correct three views.

4.3.2. Strengthen the training of student cadres

There is a student union in every higher vocational college. The student union is an important organization that helps the school manage students. It plays an important role in student management. The training of student cadres should begin from the following points: first, in the process of selecting cadres, it is imperative to strengthen the supervision over the selection process; student cadres with higher quality, healthier thinking, and stronger working ability should be selected, and assessment should be conducted before the student cadres join the organization [17]; second, it is necessary to pay attention to the management and training of student cadres once they have joined the organization; the student cadres must be responsible for themselves and set a correct example for the other students, and the counselors must assess the ideological status of the student cadres and carry out ideological and political education regularly; if ever the student cadres violate the rules, the counselors must stop and guide them appropriately; third, it is necessary to strengthen the education and training of student cadres, carry out an all-round and diversified ideological and political education for student cadres, impose strict requirements on the learning attitude and ideological attitude of student cadres, and ensure that they set an example for other students.

4.4. Set up a student management team and improve the influence of study party branches

4.4.1. Set up a student management team

A student management team is composed of excellent students and party members. By introducing excellent students and talents, we will be able to jointly form a student management team that provides support to vocational college counselors in ideological and political education. The student management team can delve into students' internal thoughts, and thus identify students' ideological trends and form a mutual help group. With a positive outlook, even in the face of social need changes and complicated social information, vocational counselors can also use the student management team to carry out ideological and political activities regularly on campus, hold meetings on ideological and political education, and understand the current situation of students in these activities. According to different majors, we can formulate activity contents by category, combine theoretical knowledge with practical activities, promote the improvement of students' personality, solve practical problems for students, and encourage students to have a positive outlook.

4.4.2. Improve the influence of the student party branch

Counselors should strengthen the influence of the student party branch, dig into the student party branch, and carry out a series of practical activities, such as learning about the party history and constitution, current social events, *etc*. Counselors should also combine ideological and political education theories with the activities of the party branch and carry out various meaningful activities, so that the party members would be able to expand their understanding of the party and improve their ideological level through practical activities. Student party members should attempt to improve their ideological understanding and play a vanguard and exemplary role in ordinary class activities. In addition, we should constantly add "fresh blood" to the student party branch, strengthen the ideological and moral construction of activists, join in the activities organized by the student party branch, and constantly improve the overall quality of activists, so that the student party branch can play a positive role in the daily management of students [18-20].

5. Conclusion

Ideological and political education plays an important role in the management of higher vocational students. It guides higher vocational counselors in the management of higher vocational students, gives full play to the value of higher vocational counselors in student management, and helps schools cultivate higher vocational students with good learning attitude, high sense of responsibility and arbitrary awareness, and excellent quality.

Disclosure statement

The author declares no conflict of interest.

References

[1] Liu Y, 2022, On the Role of Ideological and Political Education in Student Management. Jilin Education, 2022(05): 82–84.

[2] Qu J, Ni F, Xin H, et al., 2022, Preliminary Exploration of the Teaching Concept of Ideological and Political Education Based on the Curriculum in the Basic Teaching of Diagnostics. Modern Distance Education of Chinese Medicine, 20(03): 40–42.

[3] Chao S, Liu S, Miao Y, 2022, Analysis of Problems and Countermeasures in the Management of Ideological and Political Education for College Students. Journal of Hubei Open Vocational College, 35(02): 74–75.

[4] Li J, 2022, Student Management and Ideological and Political Education. Middle School Political Teaching Reference, 2022(02): 85.

[5] Zheng S, 2022, Innovative Research on the Effective Integration of Ideological and Political Education and Student Management in Colleges and Universities Under the Background of Diversified Student Sources. Journal of China Multimedia and Network Teaching, 2022(01): 180–183.

[6] Chen H, 2021, Problems and Path Exploration of College Student Management in the Perspective of Ideological and Political Construction. University, 2021(48): 41–43.

[7] Zhang Y, 2021, Effective Improvement of College Student Management Under the Ideological and Political Education Model. Chinese Teachers, 2021(S1): 9.

[8] Ding F, 2021, How Do Counselors in Higher Vocational Colleges Effectively Integrate Ideological and Political Education into Students' Daily Management. Journal of Hubei Open Vocational College, 34(20): 113–114.

[9] Li K, 2021, Higher Vocational Counselors Explore Student Management Through Ideological and Political Education. Knowledge Library, 2021(20): 88–90.

[10] Zhang Y, 2021, Reflections on the Integration and Development of Student Management and Ideological and Political Education in Vocational Colleges. Modern Vocational Education, 2021(41): 204–205.

[11] Shen Y, 2021, Exploring the Organic Combination of Ideological and Political Education and Student Management in Higher Vocational Colleges. Public Relations World, 2021(18): 98–99.

[12] Ge L, 2021, Exploration on the Practice Path of Ideological and Political Education in College Student Management. Public Relations World, 2021(17): 127–128.

[13] Zhou Y, 2021, Analysis of the Ways in which Student Management Can Promote College Students' Ideological and Political Education. Proceedings of the Academic Forum on Course Teaching and Management Research, 867–871.

[14] Chen W, 2021, Analysis of College Student Management under the Ideological and Political Ideology Theory. University, 2021(36): 85–87.

[15] Zheng J, 2021, Reflections on the Integration and Development of Student Management and Ideological and Political Education in Vocational Colleges. Journal of Ezhou University, 28(05): 33–35.

[16] Ji X, 2021, Exploration on the Integration and Development of College Student Management and Ideological and Political Education. Journal of China Multimedia and Network Teaching, 2021(09): 145–147.

[17] Li Y, 2021, Research on the Countermeasures for the Deep Integration of Higher Vocational Ideological and Political Education and Student Management. Industry and Technology Forum, 20(16): 221–222.

[18] Lan D, 2021, Analysis of the Penetration of Ideological and Political Ideas in the Management of College Students. Talent, 2021(22): 139–142.

[19] Liu X, 2021, Research on the Combination of Ideological and Political Education and Student Management in Colleges and Universities. Times Report, 2021(07): 138–139.

[20] Feng W, 2021, Exploring the Key Link of the Integration of Ideological and Political Education and Student Management in Colleges and Universities. The World of Writers, 2021(21): 173–174.

Publisher's note

Bio-Byword Scientific Publishing remains neutral with regard to jurisdictional claims in published maps and institutional affiliations.

Journal of Contemporary Educational Research, 2023, Volume 7, Issue 2
http://ojs.bbwpublisher.com/index.php/JCER
ISSN Online: 2208-8474
ISSN Print: 2208-8466

Research on the Intelligent Distribution System of College Dormitory Based on the Decision Tree Classification Algorithm

Huiping Han[1], Beida Wang[2]*

[1]China University of Geosciences (Beijing), Beijing 100083, China

[2]School of Earth Sciences and Engineering, Nanjing University, Nanjing 210023, Jiangsu Province, China

***Corresponding author:** Beida Wang, 951551918@qq.com

Copyright: © 2023 Author(s). This is an open-access article distributed under the terms of the Creative Commons Attribution License (CC BY 4.0), permitting distribution and reproduction in any medium, provided the original work is cited.

Abstract: The trend toward designing an intelligent distribution system based on students' individual differences and individual needs has taken precedence in view of the traditional dormitory distribution system, which neglects the students' personality traits, causes dormitory disputes, and affects the students' quality of life and academic quality. This paper collects freshmen's data according to college students' personal preferences, conducts a classification comparison, uses the decision tree classification algorithm based on the information gain principle as the core algorithm of dormitory allocation, determines the description rules of students' personal preferences and decision tree classification preferences, completes the conceptual design of the database of entity relations and data dictionaries, meets students' personality classification requirements for the dormitory, and lays the foundation for the intelligent dormitory allocation system.

Keywords: Intelligent allocation; Personal preference; Information gain; Decision tree classification; Individualization

Online publication: February 1, 2023

1. Introduction

In 2019, the scale of enrollment in ordinary colleges and universities reached 112.6 million, and the number of teaching staff reached 2.5667 million. Facing such a large service body, logistics management is faced with several major challenges. The traditional dormitory distribution system based on majors and reporting order deviates from the policy guidance of "building a high-quality education system." Giving full consideration to students' work and rest habits, health habits, personality traits, and other attributes, a study is carried out on the dormitory intelligent distribution system.

2. Design and analysis of the intelligent distribution system

2.1. Demand analysis

Pre-survey – set questionnaire content – publish questionnaire – collect preference data – import data to ensure the accuracy, effectiveness, and pertinence of the intelligent distribution system. Complete the initial allocation – receive feedback – optimize allocation – form a smart feedback system. Through the information platform, real-time viewing, statistics, addition, deletion, modification, and other operations can be done.

In order to meet the management requirements of the school and the individual development of students, the following principles should be adhered to when allocating dormitories: students of the same grade,

major, and class shall be allocated to the same dormitory and floor as much as possible; and students with high preference matching shall be assigned to the same dormitory.

2.2. Module design

The function module is divided into three parts. The first part is the preference information input section. Input the preference information into the database and preprocess the missing and duplicate values. The second part is the intelligent distribution section. After receiving the preference data, based on the decision tree classification algorithm, select the allocation scheme with the highest overall harmony and realize the personalization and automation of dormitory allocation. The final part is the distribution result intelligent feedback module. Allow students to exchange information with the system administrator according to the allocation results, form a satisfaction feedback report, as well as improve and optimize the functional areas.

2.3. Process analysis

Complete the questionnaire's question setting according to the hard and soft constraints. Collect data – input – intelligent allocation – publicity results – feedback – improvement – generate a satisfaction feedback form.

3. Preference-based allocation model

3.1. Questionnaire settings

In the new era, college students who prefer online interaction comprise the majority of students on campus. Meeting their diversified needs and properly handling the conflicts caused by living habits have become important issues of student management. As early as 2017, China Youth Network launched an investigation on the dormitory relationship of 958 college students nationwide. The results showed that more than 40% of students had disputes and conflicts with their roommates, and nearly 30% of them had thought of changing their dormitories, of which living habits were the main factor. At present, Shanghai Jiaotong University, Shanghai University, and Nankai University have been experimenting with the "freshman dormitory self-selection" distribution system.

Therefore, the design of a targeted, accurate, and comprehensive questionnaire that can distinguish and meet the individual needs of college students is an important premise of the "freshman dormitory self-selection" distribution system. The impact of negative dormitory incidents on students can be divided into eight aspects: comfortability, emotional belonging, general sharing, personal safety, financial security, respect, public affairs, and interpersonal independence. Conventional coping methods include neglect, patience, ridicule, understanding and tolerance, arguments, criticism, self-reflection, communication, and reminder. According to individual needs, there are 10 factors that affect dormitory relationships: the gap between the rich and poor, different provinces, campus experience, work and rest time, snoring in sleep, bad odor, personal hygiene, cards and games, preference for sports, as well as internal and external traits. Therefore, the reasons for college students' dissatisfaction with their accommodation can be summarized as follows: difference in living habits, difference in personality, difference in interests, and difference in economic situation. According to these four differences, the acceptance level of the students in the questionnaire is set as follows: mind very much, somewhat mind, neutral, do not really mind, do not mind.

3.2. Algorithm analysis

The dormitory allocation model can be divided into unsupervised classification and supervised classification. The relationship between data can be obtained according to clustering or certain models via the unsupervised classification. The algorithm has no clear target, and the data in the data set do not need to be labeled. Hence, the effect is difficult to evaluate. On the other hand, the correlation between input and

output results can be obtained according to the existing data set via the supervised classification, and an optimal model can also be obtained through training. The supervised classification judges the optimal label for the data with only features without label and has a clear classification objective. The classification effect is easy to evaluate. In dormitory allocation, the classification results need to be evaluated, and the training model needs to be supervised, so the supervised classification is selected. In the supervised classification, the decision tree algorithm is easy to understand. It can be used for small data sets and is suitable for the classification of discrete data. It also conforms to the characteristics of student preference data set. Decision tree is a basic classification and regression method. Starting from the root node of the whole decision tree, the sub-tree shall be judged for further decision-making and decomposition according to the characteristics of each node. New features are adopted in each decision-making process. Appropriate decision threshold can reduce the classification error rate to a low level until it points to leaf nodes or no longer needs to make decisions. In that way, the density of data value can be improved as much as possible in a relatively large amount of data [1].

The decision tree generation process is transparent and visible. There is no need to preprocess the data too much, and the workload is low. It is also not affected by missing values. The decision tree is divided into categorical variables and continuous variables. Since the preference data does not meet the requirements of continuous variables, categorical variables are selected. In order to better determine the feature selection principle, the feature selection method based on information gain is introduced. Information gain refers to the change of information before and after data set division. The information gain obtained by calculating each characteristic value of data set division is the best choice. Information entropy can be defined here. On the premise that things to be classified are in multiple classes, the information x_i can be defined as follows:

$$l(x_i) = -\,log_2\, p\,(x_i),$$

where $p(x_i)$ is the probability of selecting the classification. In order to calculate the entropy, the expected value of information contained in all values for all classes needs to be calculated:

$$H = -\sum_{i=1}^{n} p(x_i)\, log_2\, p\,(x_i),$$

where n is the class number, and the value of entropy is positively correlated with the uncertainty of random variables. When the probability of entropy is obtained by data estimation, the corresponding entropy is called empirical entropy. Setting the training data set D, the empirical entropy of the training data set D will be as follows:

$$H(D) = -\sum \frac{|c_k|}{|D|}\, log_2 \frac{|c_k|}{|D|}.$$

Let there be n categories ($k = 1, 2, \ldots n$), with $|c_k|$ representing the c_k sample size belonging to the class, and $|D|$ representing the sample size of training data set D.

Before introducing information gain, the concept of conditional entropy must be defined. Information gain can represent the degree to which the information uncertainty of class Y is reduced when the information of feature X is known; conditional entropy $H(Y|X)$ represents the uncertainty of random variable Y under the condition that random variable X is known. The mathematical expectation of information entropy for X of conditional probability distribution of random variable Y under given conditions is defined as follows:

$$H(Y|X) = \sum_{i=1}^{n} p_i H(Y|X = x_i),\ p_i = P(X = x_i).$$

If the probability is zero, $0\,log\,0 = 0$. In summary, information gain can be defined as follows: $g(D,C) = H(D) - H(D|C)$. The information gain $g(D,C)$ of feature *C* on training data set *D* is defined as the difference between the empirical entropy $H(D)$ of training data set *D* and the empirical conditional entropy $H(D|C)$ of *D* under the given condition of feature *C*. However, the size of the information gain value is closely related to the relative size of training data set D, which is a relative value. When the classification of the decision tree is difficult, that is, when the empirical entropy is large, the information gain value is larger, and vice versa. In order to eliminate the relative relation between information gain and empirical entropy, gain experience ratio $g_R(D,C)$ is introduced: $g_R(D,C) = \frac{g(D,C)}{H(D)}$.

3.3. Model building

According to the decision tree classification and information gain method, define the preference state set *P*, decision attribute set *D*, decision attribute value set *V*, decision attribute ordering set *S*, and preference state description rule *f* of the subject to be assigned. According to the preferences of the students to be assigned, "mind the difference in living habits very much," "do not mind the difference in economic situation," *etc*., let the number of preference states be *n*, $P = \{s_1, s_2, s_3 \ldots, s_n\}$. Among the attributes of "mind personality differences very much" are "prefer more active roommates rather than introverted roommates" and "prefer more talkative roommates." Let the number of decision attributes be *m*, $D = \{d_1, d_2, d_3 \ldots, d_m\}$. According to the decision attribute value of "I hope my roommate does not smoke," it can be divided into acceptance and rejection. Assume that there are *k* attribute values corresponding to the decision attribute; $V = \{v_1, v_2, v_3 \ldots, v_k\}$. Decision attribute ranking set S has the same number of elements as the decision attribute set D, $S = \{s_1, s_2, s_3 \ldots, s_m\}$. s_x is the position of the decision attribute whose order is $x(x \in [1,m])$ in decision attribute set D. Therefore, the sorted decision attribute set is: $D' = \{d_{s_1}, d_{s_2}, d_{s_3} \ldots, d_{s_m}\}$. Here, the expert analysis method and the decision attribute ranking method are integrated as the ranking method of each decision attribute, that is, the decision tree classification algorithm is used as the auxiliary basis of decision attribute ranking. Preference state description rule *f* represents the relationship between the preference state of the subject to be assigned and the value of each decision attribute, that is, $P(t) = f(V_{s_1}(t), V_{s_1}(t), \ldots, V_{s_m}(t))$; among them, $P(t) \in P, Z_{a_i}(t) \in Z_{a_i}, i \in [1,m]$.

3.4. Process settings

During model analysis, the preference state of the subject to be assigned and the value and ranking of decision attributes that influence the subject to be assigned to reach a certain preference state are clarified; the classification decision tree is finally generated [2].

Set the model to form a set by analyzing the preference. The preference state set *P* is obtained; the decision attribute set and its corresponding value category are determined; and the decision attribute set *D* and decision attribute value set *V* are obtained.

Sort the allocation decision attributes by analyzing the information gain and the Gini impurity of decision tree classification. A more appropriate decision tree classification and more accurate decision attribute ranking results are obtained, and the decision attribute ranking set S under different decision tree depths is determined.

In the setting and visualization of the decision tree, according to the score of S and both model training and test sets, the optimal depth is selected for training, and the intelligent allocation decision tree model is obtained.

When forming preference state description rules, the formation rules of preference state are summarized according to the generated decision tree.

3.5. Model analysis

The survey data was preprocessed before model analysis, and the classification of four qualitative variables in the data set was encoded. However, numerical variables could only be identified by the model as size relations, so dummy variables were introduced to replace different categories of qualitative variables with one or more qualitative variables with positive integers (such as 1, 2, 3, and 4) [3]. For qualitative variables such as life habits, personality traits, interests, and economic conditions, set the acceptance level as follows: 1, mind very much; 2, somewhat mind; 3, neutral; 4, do not really mind; 5, do not mind.

3.5.1. Set the model component set

The survey questions are set as living habits, personality traits, interests, and economic conditions, and the preference state set P of the subject to be assigned can be defined as follows:

$$P = \{Habits, personality\ traits, interests, finances\}.$$

Define four decision attributes V according to the pre-survey results.

$$V_{Acceptance\ of\ lifestyle\ differences} = \{1,2,3,4,5\}$$

$$V_{Acceptance\ of\ personality\ differences} = \{1,2,3,4,5\}$$

$$V_{Acceptance\ of\ interest\ differences} = \{1,2,3,4,5\}$$

$$V_{Acceptance\ of\ economic\ differences} = \{1,2,3,4,5\}$$

3.5.2. Sort allocation decision attributes

Decision attribute sorting based on decision tree classification is the main method, supplemented by expert analysis method. Two separation principles, information gain and Gini impurity, were selected in the decision tree classification algorithm, respectively. The depth of the decision tree was taken as the independent variable, and the scores of the training set and the test set were taken as the dependent variable. The differences in scores of the two data sets were observed, as shown in **Table 1**.

Table 1. Data set score variance

Data set score variance					
Data set scores based on Gini impurity			Data set score based on information gain		
max_depth	train_score	test_socre	max_depth	train_score	test_socre
2	0.67619	0.688889	2	0.67619	0.688889
3	0.67619	0.688889	3	0.67619	0.688889
4	0.704762	0.711111	4	0.714286	0.666667
5	0.752381	0.733333	5	0.752381	0.711111
6	0.809524	0.755556	6	0.828571	0.755556
7	0.866667	0.8	7	0.885714	0.822222
8	0.895238	0.911111	8	0.895238	0.911111
9	0.942857	0.955556	9	0.942857	0.933333
10	0.980952	0.933333	10	0.971429	0.933333
11	0.990476	0.955556	11	0.980952	0.955556

The differences in scores of the data sets are visualized in **Figure 1**. In the decision tree classification simulation, the score of the training set and the test set is positively correlated with the maximum depth. When the maximum depth of the decision tree is 10 and 11, the score of the training set and the test set is above 0.97. Since the depth of the decision tree is large at this time, overfitting easily occurs, so the score of the test set is taken as the main selection basis. In order to prevent overfitting of the decision tree, the maximum depth of the decision tree classification model is set at 11. Following the algorithm principle comparison of student preference data, information gain, as the classification principle, has better fitting effect and better dormitory intelligent allocation effect [4], and the importance ranking of decision attributes is obtained: personality traits 0.30027634, life habits 0.29015753, economic situation 0.24953269, hobbies 0.16003344.

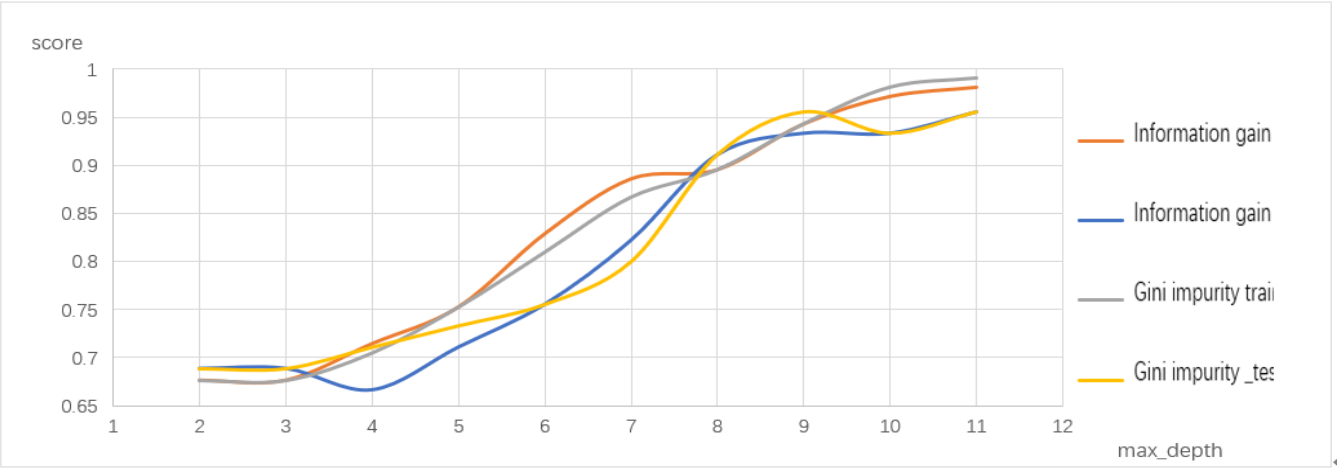

Figure 1. Data set scores of different classification principles

3.5.3. Setting and visualization of decision tree

According to the preference state set *P*, decision attribute set *D*, decision attribute value set *V*, and decision attribute ranking set *S*, parameters of the decision tree algorithm are set. In the classification results, the sample size of this layer of leaf nodes is small, and the entropy reaches a low level, indicating that most samples have completed the classification task well under the premise of eliminating overfitting.

3.5.4. Form preference state description rules

According to the nature of the decision tree classification algorithm, the path from the root node to any leaf node is the classification process of a certain sample, including the classification path based on the relationship between the size of each parameter value. Then, extract the preference state description rule *f*. Among them, Hobby refers to interest difference acceptability, Habit refers to living habit difference acceptability, Character refers to personality trait difference acceptability, and Consumption refers to economic situation difference acceptability.

```
|--- Hobby <= 3.50
|    |--- Habit <= 1.50
|    |    |--- Character <= 1.50
|    |    |    |--- Consumption <= 2.50
|    |    |    |    |--- class: 1
|    |    |    |--- Consumption > 2.50
|    |    |    |    |--- class: 2
```

```
|     |     |--- Character > 1.50
|     |     |     |--- Consumption <= 1.50
|     |     |     |     |--- class: 2
|     |     |     |--- Consumption > 1.50
|     |     |     |     |--- Consumption <= 3.50
|     |     |     |     |     |--- Habit <= 0.50
|     |     |     |     |     |     |--- class: 2
|     |     |     |     |     |--- Habit > 0.50
|     |     |     |     |     |     |--- Character <= 4.50
|     |     |     |     |     |     |     |--- Hobby <= 0.50
|     |     |     |     |     |     |     |     |--- class: 3
```

4. Database design

The main body of the intelligent distribution system is set as students, users, questionnaires, dormitory buildings, dormitory rooms, and system administrators. Along the "user – intelligent distribution system – system administrator" line description, a closed-loop operation is carried out.

Table 2 shows the data dictionary based on entity relationship.

Table 2. Category information

Serial number	Field name	Type	Length	Nonempty constraint	Description
Student information	id	varchar	10	Not null	Primary key_student number
	name	varchar	10	Not null	student's name
	state	varchar	2	Not null	whether to fill in the questionnaire
Dormitory information	id	varchar	10	Not null	Primary key_dorm number
	stu_num	int	/	/	capacity
Dormitory building information	id	varchar	10	Not null	Primary key_building number
	level_num	int	/	Not null	number of floors
User information	id	varchar	20	Not null	Primary key_username
	password	varchar	20	Not null	Password
System administrator information	super_id	varchar	20	Not null	Primary key_username
	super_password	varchar	20	Not null	password
College information	id	varchar	10	Not null	Primary key_college number
	name	varchar	10	Not null	college name
Student preference investigation questionnaire information	id	Int	10	Not null	Primary key_problem number
	habit	varchar	2	Not null	living habit
	character	varchar	2	Not null	personality traits
	hobby	varchar	2	Not null	hobbies and interests
	consumption	varchar	2	Not null	economic situation

5. Conclusion

The dormitory intelligent distribution system can reduce dormitory management energy consumption. It is one of the important issues in green campus construction. This paper is devoted to the study of a dormitory allocation system preferred by students. Using the decision tree classification algorithm as the core algorithm of intelligent allocation is an exploration and innovation of the traditional dormitory allocation

system function, but also a bold attempt to people-oriented dormitory management function, in order to contribute to the field of college dormitory allocation research.

Disclosure statement

The author declares no conflict of interest.

References

[1] Dong N, Mou Y, Liu Y, 2019, Digital Campus Construction Based on Big Data Era. Electronic Technology and Software Engineering, 21: 163–164.

[2] Yin X, Sun P, Han B, 2020, Behavior Rule Modeling of Combat Entity Based on Decision Tree. Command, Control and Simulation, 42(01): 15–19.

[3] Ge Z, Li Y, 2020, Dormitory Centralized Management Allocation Scheme Based on Integer Programming and 0-1 Backpack Problem: A Case Study of Guilin University of Electronic Science and Technology. Information and Computer (Theoretical Edition), 32(17): 3–5.

[4] Li M, Xiao L, 2020, Simulation Research on Intelligent Allocation of College Students Dormitory by Improved Genetic Algorithm. Computer Simulation, 37(07): 224–228.

Publisher's note

Bio-Byword Scientific Publishing remains neutral with regard to jurisdictional claims in published maps and institutional affiliations.

Journal of Contemporary Educational Research, 2023, Volume 7, Issue 2
http://ojs.bbwpublisher.com/index.php/JCER
ISSN Online: 2208-8474
ISSN Print: 2208-8466

Research on the Training of Interdisciplinary-Based Intelligent Manufacturing Talents

Yuan Qin[1], Meng Wang[1,2]*, Mei Li[1]

[1]China University of Geosciences, Beijing 100083, China

[2]Tangshan Polytechnic College, Tangshan 063299, Hebei Province, China

***Corresponding author:** Meng Wang, qinyuan@cugb.edu.cn

Copyright: © 2023 Author(s). This is an open-access article distributed under the terms of the Creative Commons Attribution License (CC BY 4.0), permitting distribution and reproduction in any medium, provided the original work is cited.

Abstract: As a significant field of research under the 14th Five Year Plan, intelligent manufacturing holds a special position in industrial upgrading and core technology independence. Intelligent manufacturing is an important support for building a "scientific and technological power" in the future. Cultivating creative interdisciplinary talents who can adapt to the development of intelligent manufacturing industry in the new era is of great significance for China to realize the modernization and autonomy of its industrial system. In view of the existing gap between the interdisciplinary talent training of intelligent manufacturing and the actual needs of the industry, this paper focuses on the concept of interdisciplinary construction. Based on the cycle improvement of professional construction, a curriculum system that integrates the interaction of interconnected projects is established. Through four specific measures, namely establishing the collaborative development system of intelligent manufacturing specialty, building a cycle diagnosis and reform system of intelligent manufacturing specialty, improving the curriculum system of integrated modular specialty group, and setting up an application scenario project-based curriculum, we hope to provide reference for the cross-training of compound intelligent manufacturing talents.

Keywords: Intelligent manufacturing; Personnel training; Specialty construction; Cycle diagnosis and correction

Online publication: February 1, 2023

1. Introduction

In accordance with the 14th Five Year Plan for National Economic and Social Development of the People's Republic of China and the Outline of the Vision Goals for 2035, it is imperative for the country to cultivate high-quality talents with cross-cutting research capabilities for high-quality development. Since the country is vigorously advocating interdisciplinary talent training, the new-era talent training has also been entrusted with the mission of the times, which is to create innovative talents with interdisciplinary thinking in the new era [1]. There is theoretical significance and promotion value embodied in the organic integration of interdisciplinary construction, scientific research team, team guidance approach, and student innovation ability training; in building a multidisciplinary integrated intelligent manufacturing student training environment and mechanism; as well as in cultivating innovative talents with the potential to solve major scientific problems.

In order to train high-quality talents for the country to adapt to the development of the times, many colleges and universities are now promoting interdisciplinary convergence from a forward-looking and -thinking perspective. Each university, according to their own characteristics, has set up interdisciplinary research institutes and other institutions; gathered the advantages of artificial intelligence, computer science, communication engineering, mechanical design and manufacturing, as well as other disciplines; and formed

a series of cross-disciplinary landmark construction achievements. In the face of multiple issues that need to be addressed in the process of interdisciplinary curriculum integration in the development of intelligent manufacturing in colleges and universities, this paper takes the training of intelligent manufacturing professionals as an example to analyze the pain points in the construction of a professional system and to propose solutions to them.

2. Analysis on the pain points of intelligent manufacturing talent training

Vigorously developing cross disciplines and cultivating interdisciplinary talents with the ability to integrate disciplines are strong guarantees for China's industrial upgrading in leading the fourth scientific and technological revolution [2]. In order to ensure the effect of cross-discipline construction, we should first consider the objectives of the construction, take the training of intelligent manufacturing professional and technical talents required by intelligent manufacturing enterprises and scientific research institutes as the starting point, and take meeting the future national science and technology development strategy and economic construction as the foothold in determining the capabilities that such talents should possess [3]. The issue faced by the talent training program for intelligent manufacturing specialty is the challenging construction method and curriculum system of this specialty compared to other specialties [4].

2.1. Six core scenarios for building intelligent manufacturing specialty

(1) Construction planning

The professional leader shall formulate the professional planning based on the development characteristics of domestic and foreign industries as well as the needs of China's economic construction to achieve a top-level design of professional planning by writing the planning document, task management, work assignment, *etc*.

(2) Project implementation

The professional project construction director shall complete the whole closed-loop management within the construction cycle, including the establishment, operation, change, completion, archiving, expert review, project data statistics, and other links of professional project construction.

(3) Task management

The task executor shall complete the disassembly of various subtasks of the project and carry out refined management on the specific implementation process of the task.

(4) Management of landmark achievements

Teachers shall give lectures, summarize teaching experience, teaching achievements, and research achievements, as well as complete the management of landmark achievements.

(5) Professional evaluation

The academic affairs office and other management departments shall establish a professional model evaluation system, design a scientific and reasonable professional evaluation model, and complete the objective professional evaluation.

(6) Dynamic adjustment

The school management committee shall conduct dynamic adjustment of the specialty according to the real-time specialty construction data collected via the professional data platform and complete the gradual professional diagnosis and reform work. The cycle improvement process of professional construction is shown in **Figure 1**.

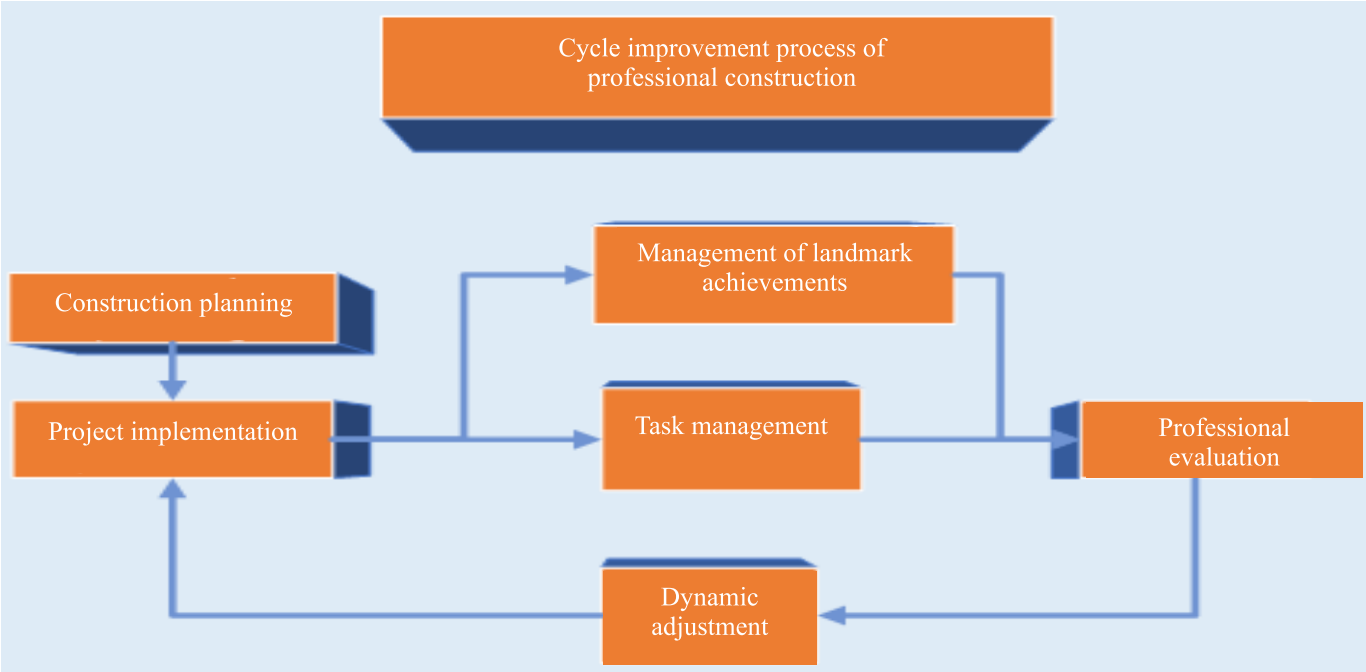

Figure 1. Cycle improvement process of professional construction

2.2. Main problems faced by and to be addressed during the construction of the cycle improvement system of intelligent manufacturing specialty

(1) Lack of professional planning

The interdisciplinary construction lacks scientific and systematic professional planning. It cannot serve the national strategy of rejuvenating the country through science and education. At present, the designated professional development is too wide to conduct quantitative evaluation and assessment, and the lack of standardized top-level design makes it difficult to achieve real-time tracking and continuous improvement in subsequent professional construction.

(2) Prioritizing project establishment while neglecting construction

The interdisciplinary construction emphasizes project establishment but neglects construction, resulting in a "head and tail" situation. The construction personnel are unable to keep abreast of the design progress in time, so a "surprise attack" is made during the construction acceptance process, resulting in a "loosening before tightening" situation. The project construction is unable to realize the scientific and reasonable use of construction funds or complete the tracking management task of the construction process.

(3) Independent subtask

The subtasks that are set in the process of discipline integration are too independent and affected by the inertia of the development of a single discipline. Hence, they cannot be combined to form an organic whole or effectively create a system integration of industrial, university, and research subprojects.

(4) Unclear organizational structure

The organizational structure of such landmark achievements as curriculum construction is unclear, and the ability-oriented curriculum construction plan, which is unable to meet the professional and scientific research quality requirements of graduate work units or achieve nationwide promotion, is lacking.

(5) Unreasonable professional evaluation

The professional evaluation process stresses on theoretical content but neglects the practice link that engineering education pays more attention to. At present, due to factors such as the shortage of school land and the isolation during the pandemic situation, students' use of off-campus training and

experimental sites is greatly affected; it is difficult to achieve interdisciplinary integration and the unity of theory and practice.

(6) Ineffective dynamic adjustment

The interdisciplinary integration and real-time monitoring of students' theoretical ability and practical level cannot be achieved through the dynamic adjustment process of majors. The outstanding scientific research and professional qualities of students are scattered in various courses, but the barriers between various disciplines have not been broken. The logical connection of curriculum design is beyond range and not reasonable enough to achieve cycle improvement.

3. Professional construction ideas: Establish a collaborative development system for intelligent manufacturing

The construction process is guided by the national 14th Five Year Plan intelligent manufacturing industry development plan, adheres to the educational concept of "three all-round education," adheres to the discipline connotation development path, and takes the national construction and development needs as guidance to cultivate highly skilled and innovative modern talents [5]. The construction process is characterized by the deep integration and practical application of the new generation of intelligent technology and equipment manufacturing industry, with the goal of training students' practical ability. A talent training mode for intelligent manufacturing professionals featuring school-enterprise cooperation, the integration of production and education, the combination of work and learning, and the integration of knowledge and practice should be established. Scientific research quality training, innovation and entrepreneurship education, as well as improvement of humanistic quality should be integrated into professional teaching practice. The specialty construction and industrial posts, the curriculum content and national standards, as well as the teaching and scientific research and production process should be combined to form a distinctive specialty construction route.

(1) Prospective specialty planning

Establish a professional construction committee composed of education and teaching experts, industry experts, and professional backbones; formulate practical normative systems according to the guidance and normative documents issued by the state at all levels; plan and carry out professional construction demonstration, the reform of talent training methods, school-enterprise cooperation curriculum development, teaching method reform, talent echelon construction, expansion of training bases, professional social services, training quality diagnosis, *etc*.

(2) Reasonable layout of project construction

Carry out demand research on intelligent manufacturing specialty construction projects, reasonably adjust the specialty structure, revise the talent training program, realize the "dynamic" transformation of specialty construction with the economic growth mode, follow the industry talent requirements, "shift" around the social market demand, and follow the "change" in industrial structure adjustment. In order to realize the deep connection between schools and enterprises, majors and industries, curriculum content and national standards, as well as the teaching process and scientific research and production process, cultivate high-efficiency and -quality talents and constantly improve the development ability of the professional service industry.

(3) Fine execution of task management

The university has taken the lead in setting up a professional management committee. The professional construction committee should follow the objective law of talent training in higher education, promote each major to provide high-quality scientific research and practical talents and intellectual support for national economic reform and technological development according to the needs of national economy

and social development, mobilize and encourage all members to pool their wisdom, as well as offer suggestions for the construction and development of the major.

(4) Scientific and standardized evaluation of teachers

Strengthen teaching management, scientifically and accurately evaluate the quality of the teaching work, grasp teachers' actual teaching ability and teaching level, as well as promote the moral cultivation and teaching ability of teachers. The evaluation of teachers' ability is carried out by investigating several indicators, including teaching preparation, teaching content, teaching process, teaching attitude, teaching effect, moral cultivation, guidance for competitions, social services, teaching reform, and other research results.

(5) Scientific evaluation of construction level

Based on the comprehensive data collection platform of the school, the process operation data generated in the process of running the school are collected, so that the intelligent manufacturing specialty can match the corresponding electronic information specialty group. Through the docking of specialty group setting and industrial demand, curriculum content and specialty specification, teaching and production process, as well as research ability training and lifelong learning, the specialty setting should be consistent with the requirements of industrial upgrading, and the school should be promoted to better serve the regional economy and the overall development of students.

(6) Steady progress of professional reform

The specialty construction committee should make overall plans for the layout of specialty groups, the construction of intelligent manufacturing specialty, and integrate with other plans that are related to courses, teachers, students, and international cooperation to form a specialty construction goal chain and standard chain of "connecting up and down, connecting left and right." According to the 14th Five Year Construction Plan and the Annual Work Plan of the specialty, the goal and task of the specialty construction and talent training should be defined, along with the specific construction goals and standards. Taking this as the basis for the cycle improvement of intelligent manufacturing, carry out professional self-diagnosis and write a professional diagnosis and reform report as a whole. The overall professional construction and development system is shown in **Figure 2**.

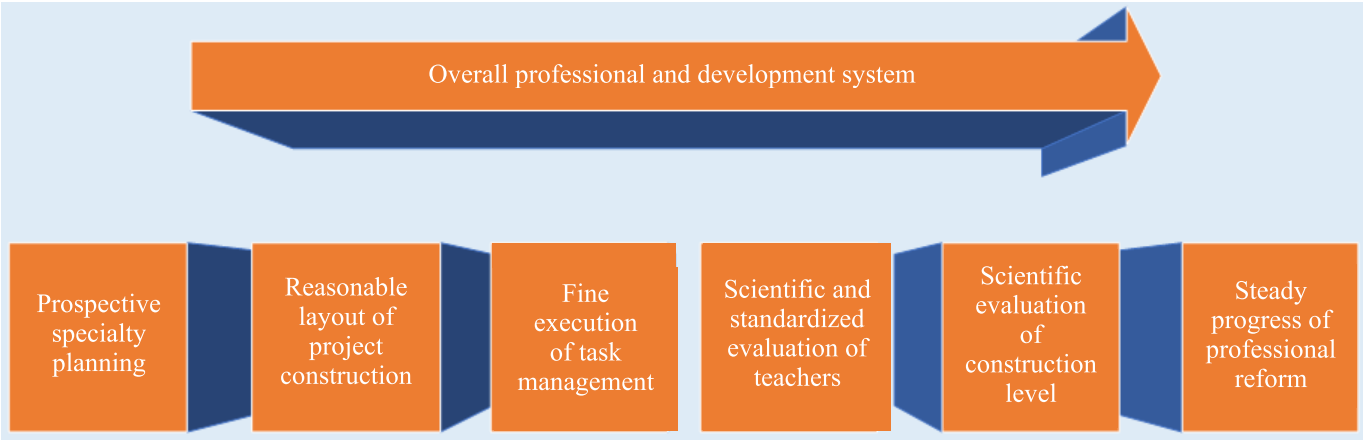

Figure 2. Professional construction and development system

4. Thoughts on the construction of the curriculum system

Based on the national scientific and technological development needs, the regional economic development needs of Beijing Tianjin Hebei, the development needs of modern equipment manufacturing industry, and the development needs of students, the talent training objectives of intelligent manufacturing are determined. In combination with the requirements for professional talents required for national industrial upgrading,

taking the training of students' comprehensive professional ability as a breakthrough, based on the idea of "industrial chain – post group – module – curriculum – project – task – subtask," the typical work tasks of the intelligent manufacturing industry, the industrial implementation standards and national occupational appraisal specifications, as well as the complexity of the working environment and objects of the occupational posts, the new technologies, new processes, new standard and scientific literacy, innovation ability, and labor quality are all introduced into the curriculum, integrating ideological and political education, labor education, aesthetic education, innovation and entrepreneurship education, research ability training, craftsmanship spirit, and foreign language certificate standards, and establishing a modularized curriculum system of "result-orientated setting, ability grading training, and module progressive pushing," as shown in **Figure 3**.

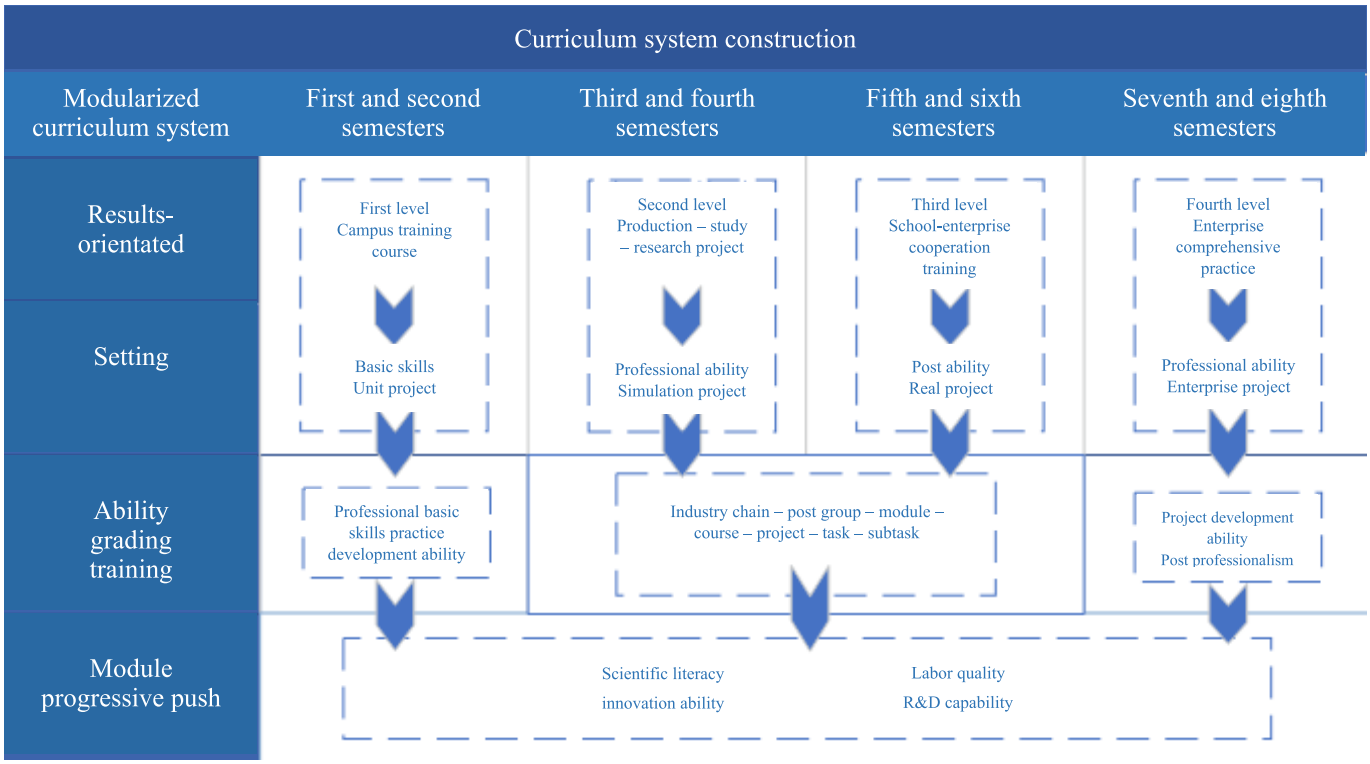

Figure 3. Intelligent manufacturing modularized curriculum system

Design application scenario project-based courses. In order to realize the integration of interdisciplinary courses, the intelligent manufacturing specialty should not only construct a system of relevant courses within the specialty group, but also pay attention to the cultivation of students' practical and scientific research innovation ability; achieve the integration of theory and practice, as well as knowledge and practice; and maximize the integration among disciplines. This is of great significance to the training research and development (R&D) personnel and engineers to become competent for work in intelligent manufacturing enterprises and scientific research institutes. Schools and enterprises cooperate to build a practical teaching base inside and outside the school. This teaching base acts as a platform to integrate teaching content and production practice, combining work with learning, so as to improve students' theoretical ability and cognitive level. Based on the interdisciplinary characteristics of the intelligent manufacturing discipline itself and the needs of the industry for compound talents, the online and offline, on- and off-campus hybrid teaching is realized to achieve an integrated production, teaching, and research development.

In order to achieve project-based teaching, the key is to effectively transfer the actual application scenarios in enterprises to the classroom. Schools and enterprises cooperate to build a project case base, adopt the online and offline hybrid teaching mode, flexibly conduct discussions; encourage heuristic group cooperation, cooperative inquiry, and other teaching methods; complete students' skill training, and achieve the integrated development of production, teaching, and research. The assessment method employed is process assessment (learning attitude, team cooperation, project completion quality, scientific research and innovation literacy, *etc*.). Students would be able to develop the ability to handle operation management, data management, and spare parts management of intelligent manufacturing equipment. They would also possess the basic ability of planning, implementation, acceptance, and quality management of intelligent manufacturing enterprises, as well as the ability to develop, design, operate, and maintain intelligent manufacturing equipment. According to the national strategic development goals and the industry's cutting-edge needs, an integrated curriculum should be created to adapt to interdisciplinary talent training. After training in follow-up enterprise practice, students would have solid theoretical basis and cutting-edge discipline thinking and also a sense of career planning, a strong team spirit, and win-win thinking. The design idea of application scenario project-based curriculum is shown in **Figure 4**.

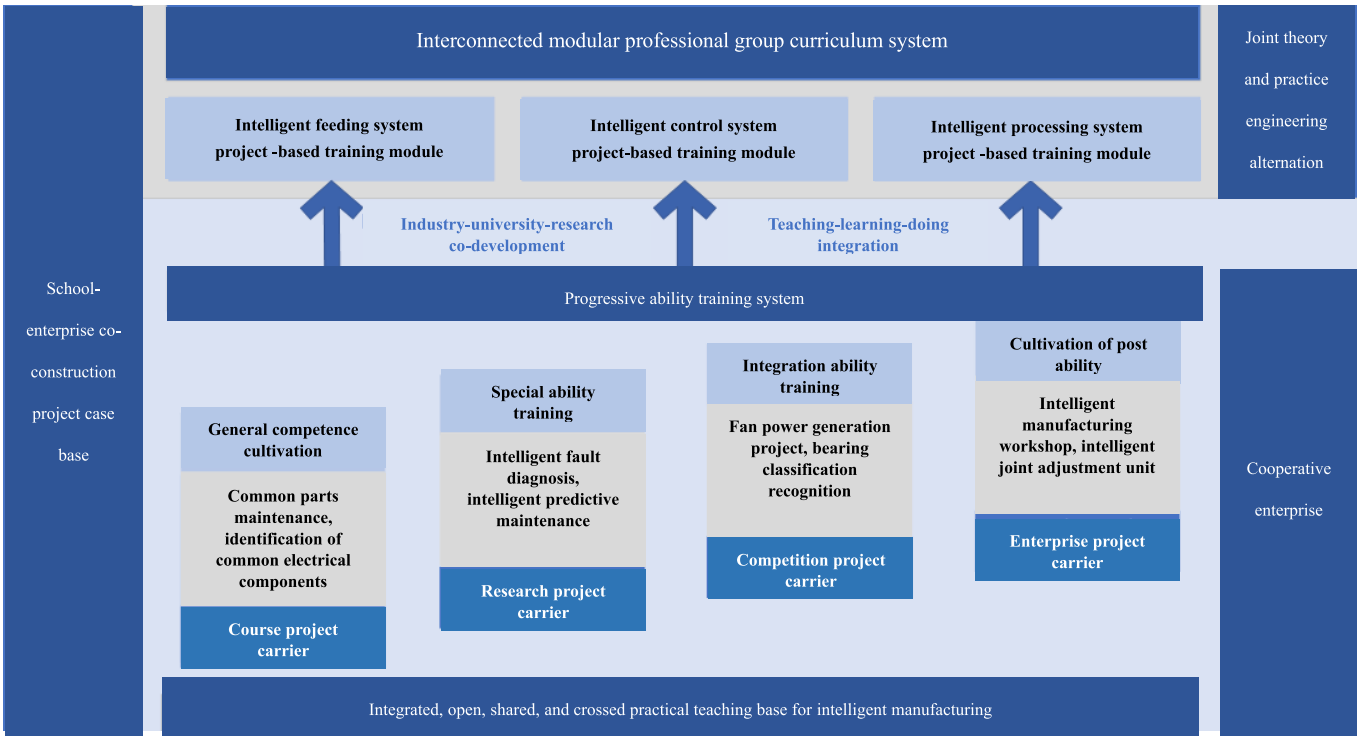

Figure 4. Application scenario project-based curriculum design idea

5. Conclusion

With the increasingly prominent role of interdisciplinary majors, such as intelligent manufacturing, in the national economy, it is particularly important to integrate all relevant majors to form an intelligent manufacturing talent training program that is suitable for China's strategic development goals and industrial upgrading requirements based on the interdisciplinary concept. Four specific measures, namely, establishing a professional collaborative development system, creating a professional cycle diagnosis and reform system, building a curriculum system of integrated and interconnected modular professional groups, and designing application scenario project-based courses, are proposed in an effort to form a self-improving intelligent manufacturing talent training program, which will provide a reference for subsequent research.

Funding

This work was supported by the 2022 China University of Geosciences (Beijing) Disciplinary Development Research Fund Project "Research on Intelligent Manufacturing Talents Training Method Based on Interdisciplinary Integration" (Project Number: 2022XK104).

Disclosure statement

The authors declare no conflict of interest.

References

[1] Wang T, 2022, Research on the Policy Process of Setting Up Cross Disciplinary Categories in China – Multi Source Flow Theory Based on Embedded System. China Higher Education Research, 2022(04): 23–28. https://doi.org/10.16298/j.cnki.1004-3667.2022.04.04

[2] Wu X, Xiang Y, Li Y, et al., 2020, Exploration of the Collaborative Training Mode of Compound Innovative Talents Based on Interdisciplinary Integration. Laboratory Research and Exploration, 39(10): 146–148 + 194.

[3] Xu D, Liu R, Wang Q, 2021, The Important Role of Interdisciplinary Team Building in the Reorganization of National Key Laboratories – Taking the National Key Laboratory of Ultrahard Materials of Jilin University as an Example. Experimental Technology and Management, 38(12): 14–18. https://doi.org/10.16791/j.cnki.sjg.2021.12.003

[4] Liu K, 2020, New Engineering Education Governance: Framework, System and Mode, thesis, CNKI database, Tianjin University. https://doi.org/10.27356/d.cnki.gtjdu.2020.000385

[5] Wang N, Shang L, Wang Y, 2020, Research on the Training Mode of Mechanical Applied Talents Based on the Mechanism of Industry Education Integration and Collaborative Education. Journal of Higher Education, 2020(27): 180–182 + 185.

Publisher's note

Bio-Byword Scientific Publishing remains neutral with regard to jurisdictional claims in published maps and institutional affiliations.

Journal of Contemporary Educational Research, 2023, Volume 7, Issue 2
http://ojs.bbwpublisher.com/index.php/JCER
ISSN Online: 2208-8474
ISSN Print: 2208-8466

The Role of Skills Competitions in Improving the Practical Ability of Vocational College Students

Shang Wang*, Fei Peng, Zhixin Feng

School of Automotive Engineering, Beijing Polytechnic, Beijing 100176, China

Corresponding author: Shang Wang, wangshang@bpi.edu.cn

Copyright: © 2023 Author(s). This is an open-access article distributed under the terms of the Creative Commons Attribution License (CC BY 4.0), permitting distribution and reproduction in any medium, provided the original work is cited.

Abstract: Vocational education and general education are two different types of education that are equally important. The orientation of talent training in vocational education is to nurture skilled talents to serve the society. The practical ability of students is both the focus of teaching in vocational colleges and the requirement of enterprise posts. The various types of skills competitions provide a "stage" for students to showcase their abilities. First, this paper explores students' problem-solving ability while preparing for these competitions, expounding the importance of vocational education and skills competitions. Second, this paper summarizes the views of different scholars. Third, based on a specific case, this paper describes the improvement in students' ability while preparing for these competitions. Fourth, this paper analyzes the results of the questionnaire survey conducted to investigate the improvement in students' ability. Lastly, this paper puts forward several suggestions that appeal for vocational colleges to pay more attention to skills competitions.

Keywords: Skills competition; Practical ability; Vocational college students; Vocational education

Online publication: February 2, 2023

1. Introduction

Rapid economic development is inseparable from high-quality skilled talents. In recent decades, vocational education has delivered a large number of skilled talents to various industries, providing intellectual support for rapid economic development. With the acceleration of industrial upgrading and economic transformation, various industries have higher requirements for skilled talents, and the importance of vocational education is becoming more and more prominent [1].

Vocational colleges are positioned to cultivate high-quality skilled talents. Hands-on ability and practical ability are both very important. These abilities are not only the job requirements of enterprises, but also the focus of talent training. Skills competition is an important supplement to campus teaching. In the preparation process, students' manipulative ability can be effectively improved. Taking the mechanical skills competition as an example, under the guidance of an instructor, students have to design and process mechanical equipment independently according to the competition requirements. In addition to meeting the basic requirements of the skills competition, the stability, accuracy, and safety of the developed mechanical equipment need to be fully considered. Mechanical design, mechanical drawing, engineering mechanics, mechanical manufacturing technology, control engineering, and other professional course knowledge need to be applied. Obviously, it is a challenge to students' comprehensive quality, especially in terms of their ability to apply theoretical knowledge.

The preparation and participation process is an opportunity for students to re-learn and further consolidate their knowledge. Students who participate in skills competitions have shown to have more solid

professional knowledge compared with those who do not participate. It is known to all that students who win skills competitions are more likely to be employed. Enterprises participating in these competitions may even provide opportunities to award-winning students to work or practice in their firms.

The Chinese government is also becoming more aware of the significance of skill competitions. In April 2022, the government introduced the Law on Vocational Education, which emphasizes the role of skills competitions in vocational education. The document states that vocational institutions should "provide a platform for technically skilled personnel to showcase their skills and compete with each other" and "continue to train more high-quality skilled talents through skills competitions" [2,3].

2. Literature review

What is the role of skills competitions in promoting vocational education? Scholars have carried out research work in different fields. In a study, Japanese scholar Wan [4] used a big data approach to investigate the intrinsic relationship between vocational skills, and these findings have provided a theoretical basis for other vocational skills research fields. Maia [5], a British scholar, believes that skills competitions can improve the attractiveness of vocational education. He conducted 110 interviews with contestants of a skills competition. Based on these data, he analyzed the potential contribution of skills competitions to revitalizing the British vocational education. Scholar Wu [6] has carried out an in-depth analysis of the problems of digital education and suggested the addition of a simulation operation competition module within the operating system. Students play games (compete with each other) to complete learning tasks, and thus improve the quality of teaching and learning. In another study, Li [7] analyzed the importance of the "tiered ladder" training mechanism in the context of vocational skills competition, taking secondary-level electronics students as the research subject. Wang [8] believes that guiding students to participate in various skills competitions can promote the construction of the teaching staff in vocational colleges. He suggested that teachers should take an active part in these competitions and consciously improve their teaching ability. Zhu [9] believes that the important indicators of talent training in higher vocational education are skill level and practical ability. He found that skills competition training players have advantage in employment competitiveness and sustainable development ability. Liu [10] has investigated the overall situation of the transformation and upgrading of vocational skills competitions and put forward several general countermeasures for the transformation and promotion of national vocational skills competitions. Di [11] believes that vocational skills competitions have a positive impact on the teaching in vocational colleges. He found that vocational skills competitions can effectively improve students' innovation ability and practical ability. The aforementioned research results show that skills competitions have played a role in promoting vocational education. However, the research done is relatively broad, and there is a lack of research on specific cases. This paper takes the design and construction of a certain skills competition as a case to carry out the relevant research work.

3. Case analysis

3.1. Introduction to entries

A lifting device for sophisticated equipment was designed by several students for a skills competition. However, they encountered difficulties in carrying out mechanical property tests. As shown in **Figure 1**, the center precision equipment is to be lifted. When hoisting the precision equipment, the vertical deflection should be less than 1°. Located on either side of the precision equipment are two identical cranes, and the hydraulic equipment powers the claws through a lever device to lift the precision equipment. Obviously, the deformation of the support column must be considered. **Figure 2** is a schematic diagram of the support column for the leverage.

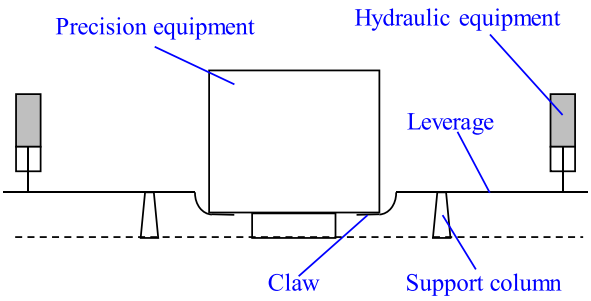

Figure 1. Structure of the skills competition entry

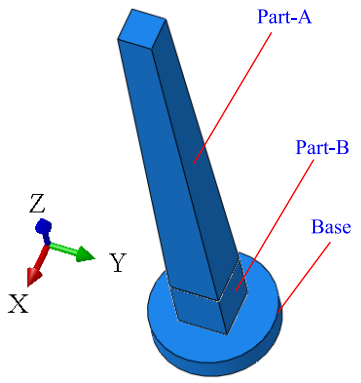

Figure 2. The research logic diagram of this paper

3.2. Solution

In order to solve the problem, both the teachers and the students considered using finite element software for modeling and simulation calculation. In order to complete it as soon as possible, the tasks were divided between the teachers and the students. The teachers were primarily responsible for finite element modeling and simulation, while the students were responsible for image production, formula editing, report writing, *etc*.

3.3. Simulation results

The model was simulated on a computer, and relevant data and nephograms were obtained. **Figure 3** shows the U3 nephogram of the model. Different colors represent different displacement sizes (the redder the color, the greater the U3 value). As can be seen from the annotation chart, the U3 value on the upper surface of Part-A is the maximum, which is 14.67 μm. The data met the students' design requirements. This is the result obtained by the finite element simulation method applied to the case.

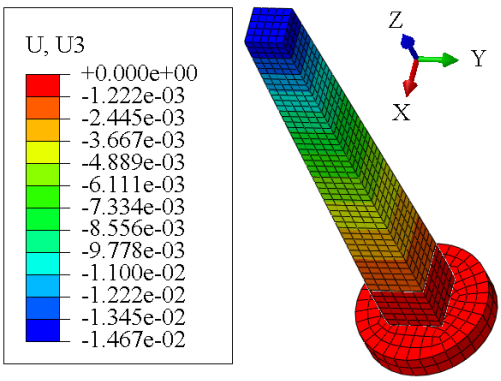

Figure 3. U3 nephogram of the model

4. Questionnaire investigation

The students participated in the whole problem-solving process, thus exercising and improving their abilities. The operations performed by the students are shown in **Table 1**.

Table 1. Operations performed by students

J1:	Consult relevant data and determine the specific size of the sample.
J2:	Determining specific needs for test data.
J3:	Creating a 3D drawing of the sample. After completing J3, the students' drawing ability improved.
J4:	Processing the data.
J5:	Writing the test report. Similar to J4, the students completed the project report, comprising figures, tables, and formulas, which provides the necessary data support for the skills competition entry.

The research team conducted a questionnaire survey, comprising several questions (**Table 2**).

Table 2. Survey questions

Q1:	Did the skill competition help improve your practical ability?
Q2:	Did you consolidate your knowledge through the skill competition?
Q3:	Is the skill competition helpful to your data analysis ability?
Q4:	Is the skill competition helpful to your drawing ability?

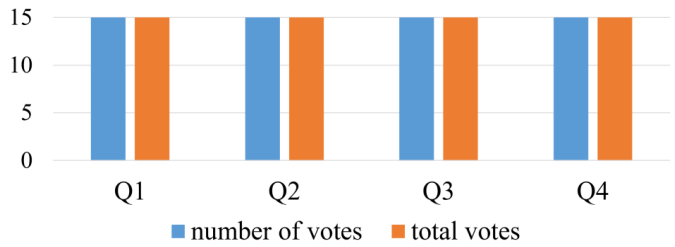

Figure 4. Questionnaire for students

The statistical data are shown in **Figure 4**. All the students responded "Yes" to the questions. Two students in the participating team expressed great interest in simulation technology and software. They made it clear that they had taken the time to learn about simulation software. The students showed interest in learning and were willing to take the initiative to learn. This was in line with the teachers' expectations.

5. Specific suggestions

5.1. Increase students' participation

Skills competitions are not "elite education," and students should show their talents on this "stage." Instead of "picking" students with high grades, more students should be involved. Especially for school-level skills competitions, teachers should encourage more students to participate. Every student who takes part should have a chance to show his/her own ability and a fair chance to compete. Vocational schools should set transparent and fair competition rules and select student teams for municipal competitions through "elimination competitions." "Elimination" winners should be praised so as to improve their confidence and motivation to learn. Students who are eliminated should be affirmed and encouraged by the teachers. Even if they do not win, students will be able to improve their hands-on skills as they participate in skills competitions.

5.2. Integrate the competition content into classroom teaching

The research team's teaching experiments showed that the content of the skills competition aroused students' interest in learning. Vocational schools should encourage teachers to incorporate skills competitions into traditional classroom teaching to motivate students. On the one hand, teachers should use skills competition works to help students better understand the teaching content. On the other hand, teachers should encourage students to bring up innovative ideas around the knowledge points when explaining them, thus laying a foundation for the design of future entries. When teaching about skills competitions in class, teachers ought to carry out more publicity to encourage students to take part in these competitions.

5.3. Build a skills competition platform

Vocational colleges should invest more money in building skills competition platforms to create better conditions for both teachers and students. Relying on skills competition platforms, schools should implement the regular mechanism of skills competition and engender it as the "second classroom" for students to grow. With the help of skills competition platforms, schools can also hire technical personnel from enterprises to train and guide the participating students. Schools that can afford it should hold a skills competition month every year and include as many majors as possible. Schools should also focus on supporting projects corresponding to national and provincial skills competitions. Only through the selection of excellent projects can schools carry out the preparation work for higher-level skills competitions.

6. Conclusions

Vocational skills competition is a major reform and innovation of the vocational education system. It is necessary for students in vocational colleges to participate in various skills competitions. Teachers should attach importance to improving students' practical ability. The leaders of vocational colleges should formulate more attractive policies to encourage both teachers and students to participate more actively in various skills competitions.

Funding

This work was supported by the Project of China Vocational Education Association (Project Number: ZJS2022YB024), and the Project of Innovation and Development Center of Ideological and Political Work (Beijing Polytechnic), Ministry of Education (Project Number: 2022X305-SXZC).

Disclosure statement

The authors declare no conflict of interest.

Author contributions

F.P. and S.W. conceived the idea of the study and wrote the first draft of the paper. Z.F. proofread the whole text.

References

[1] Wang S, 2019, Significance, Characteristics and Implementation Measures of the Implementation Plan of National Vocational Education Reform. Journal of Shijiazhuang Vocational and Technical College, 31(3): 4–10. http://doi.org/10.3969/j.issn.1009-4873.2019.03.002

[2] Meng K, Hao Z, 2022, The New Vocational Education Law: Significance, Characteristics and

Breakthrough. Vocational and Technical Education, 43(15): 20–24. http://doi.org/10.3969/j.issn.1008-3219.2022.15.005

[3] Liu X, 2022, Analysis of the "Good Law" Characteristics of the New Vocational Education Law from the Perspective of Policy Analysis. Vocational and Technical Education, 43(22): 6–10. http://doi.org/10.3969/j.issn.1008-3219.2022.22.002

[4] Wan J, Chen BB, Si HY, 2017, Mining and Measurement of Vocational Skills and Their Association Rules based on Big Data. 2017 Proceedings of the International Conference on Digital Technology in Education, 59–63. https://doi.org/10.1145/3134847.3134858

[5] Chankseliani M, James Relly S, Laczik A, 2016, Overcoming Vocational Prejudice: How can Skills Competitions Improve the Attractiveness of Vocational Education and Training in the UK? British Educational Research Journal, 42(4): 582–599. https://doi.org/abs/10.1002/berj.3218

[6] Wu B, Li YS, 2018, Design of Evaluation System for Digital Education Operational Skills Competition based on Block Chain. 2018 IEEE 15th International Conference on E-business Engineering (ICEBE), 102–109. https://doi.org/10.1109/ICEBE.2018.00025

[7] Li SN, 2021, The Research on the "Hierarchical Ladder" Training of Vocational Ability of Students in Electronic Major of Secondary Vocational School based on the Professional Skills Competition. The Guide of Science & Education, 2021(13): 39–41. https://doi.org/10.16400/j.cnki.kjdk.2021.13.013

[8] Wang S, Feng ZX, 2022, Promotion of Skills Competition on Construction of Teaching Staff in Higher Vocational Colleges. 2022 7th International Conference on Social Sciences and Economic Development (ICSSED 2022), 1252–1257. https://doi.org/10.2991/aebmr.k.220405.207

[9] Yan Z, Jiao F, Shuang G, et al., 2016, The Analysis and Consideration to Talents Training in Higher Vocational Colleges of Professional Skills Competition. 2016 International Conference on Education, E-Learning and Management Technology, 459–463. https://doi.org/10.2991/iceemt-16.2016.89

[10] Liu LY, Yang RJ, Wang SW, et al., 2017, Research on the Transformation and Promotion of Resources and Achievements of National Vocational Skills Competition. 2017 3rd International Conference on Social Science and Higher Education, 17–20. https://doi.org/10.2991/icsshe-17.2017.5

[11] Ding QJ, 2018, Analysis on the Practice of Vocational Skills Competition Promoting the Reform and Development of Vocational Colleges. Charming China, 2018(45): 149–150. https://doi.org/10.3969/j.issn.1673-0992.2018.45.270

Publisher's note

Bio-Byword Scientific Publishing remains neutral with regard to jurisdictional claims in published maps and institutional affiliations.

Journal of Contemporary Educational Research, 2023, Volume 7, Issue 2
http://ojs.bbwpublisher.com/index.php/JCER
ISSN Online: 2208-8474
ISSN Print: 2208-8466

Effectiveness of Oral English Blended Teaching Supported by Digital Technology in Universities

Zhonger Wang[1,2]*, Nurliyana Bukhari[1], Yang Han[3], Qi Tang[1]

[1]School of Education and Modern Languages, Universiti Utara Malaysia, Sintok 06010, Malaysia

[2]School of Foreign Language, Shanghai Lixin University of Accounting and Finance, Shanghai 201209, China

[3]School of Languages, Civilisation and Philosophy, Universiti Utara Malaysia, Sintok 06010, Malaysia

Corresponding author: Zhonger Wang, ZhongerWang@hotmail.com

Copyright: © 2023 Author(s). This is an open-access article distributed under the terms of the Creative Commons Attribution License (CC BY 4.0), permitting distribution and reproduction in any medium, provided the original work is cited.

Abstract: An empirical study of oral English blended teaching was conducted in a university. The experiment class, which was under the blended teaching mode supported by digital technology, made significant improvements in language accuracy and range, discourse length and coherence, as well as flexibility and appropriateness. On the other hand, there was no significant improvement in the scores of the control class. Through the analysis of results by means of independent t-test and paired sample t-test, we drew the following conclusions: the oral performance of university students from the experiment class significantly improved; there was remarkable difference in the total oral English scores between the experiment class and the control class; the improvement in the total score and the score of each module showed that blended teaching had significant effect on the improvement of university students' oral English performance.

Keywords: Blended teaching; Digital technology; Oral English

Online publication: February 10, 2023

1. Introduction

The overall objective of this empirical study was based on the requirements of the College English curriculum syllabus in China. In light of the principle of interest, scientific nature, and communicativeness of the syllabus, this study aimed to help university students develop their oral English performance via a series of elaborate activities supported by digital technology in and after class. Oral English falls in the category of language output [1]. It is self-evident that the latter will be in place only if there is a large amount of language input [2]. Therefore, in this empirical study, the teaching of listening and speaking was conducted simultaneously; that is to say, the students learned both listening and speaking at the same time in the process of cooperative and interactive learning with the support of digital technology.

2. Research hypothesis

In order to verify the effectiveness of oral English blended teaching in universities, we conducted an empirical study over a period of one semester. The hypothesis in the study was as follows: compared with the traditional style, the blended one, which was supported up by digital technology, had more advantages, as we intended to achieve the goal of enhancing university students' oral English performance.

3. Experiment conditions

3.1. Subjects

We selected sophomores as our subjects. The reason was that they had relatively more class hours in English and plenty of extracurricular time, which ensured the smooth running of blended teaching in- and out-of-classroom settings.

For the experiment to be conducted smoothly, the class with high ownership rate of digital devices was selected as the experiment class. Of the 50 students in the experiment class, 90% of them had laptops equipped with wireless internet access, and all of them had mobile phones, which enabled them to play and record both audio and video clips. These students were post-00s and had an innate familiarity with digital learning.

As far as the randomly selected control class was concerned, its number and sex ratio were the same as those in the experiment class. Lectures were given to both the classes by the same lecturer. The class hours and teaching conditions were also same. Before the experiment, an English proficiency test in listening and speaking was undertaken. The scores were analyzed by means of independent sample t-test. From the statistical results, there was no significant difference in the scores between the two classes. In other words, both groups were basically at the same level and comparable.

3.2. Technical environment

Following the selection of the experiment class, it was found by survey that the majority of them had more free time at noon or in the evening. Data from a similar study conducted previously have also shown that both time intervals were the peak time for university students to surf the internet. Therefore, the guidance for students' extracurricular learning was mainly conducted during these two time intervals, *i.e.*, the students in the experiment class used mobile phones, laptops, i-pads, and other mobile devices for extracurricular learning under the guidance of their lecturer. While teaching, the lecturer employed both summative and formative evaluations to assess the students' learning effect.

3.3. Learning content and resources

The textbook used for both the experiment class and the control class was *Listening and Speaking for College English Courses* published by Shanghai Foreign Language Teaching Publishing Group. As for supplementary materials, original English films, news in Voice of America (VOA) Special English, BBC News, and newsreels, documentary shots, as well as animations were selected after certain factors were taken into consideration, such as the English proficiency and preferences of students.

The teacher provided teaching and learning resources through online learning platforms, such as "Super Star" and "U Campus." The adaptive content was accessible via the computer and mobile phone.

3.4. Evaluation tools

The oral test utilized in this empirical research covered a broad scope of topics and types. It was elaborately designed to evaluate the students' oral proficiency from different facets, especially their communicative competence. Unified scoring standards and methods were adopted. In order to maximize the internal consistency and reliability of the test, qualified examiners were selected.

3.4.1. Test content

In order to effectively assess communicative competence and the use of strategies in this regard, we divided the test content into three parts.

The first part was a 5-minute interview between the candidate and the examiner in the form of questions and answers. Questions relating to the life of the respective candidate, including their personal information,

hobbies, specialties, *etc*., were posed by the examiner. The candidates were required to respond to these questions accordingly. This part mainly examined the respective candidate's fluency of oral expression and accuracy of pronunciation and intonation, thus reflecting the functionality of language.

The second part included individual speeches and group discussion for 1.5 and 4.5 minutes, respectively. The second part took about 10 minutes in total. This part assessed the respective candidate's ability in language organization and oral expression as well as whether the content was relevant and substantial.

In the third part, questions were asked again to determine the respective candidate's oral proficiency, especially in the aspect of communicative competence. The third part took about 5 minutes, in which the examiner played different roles to provide a communicative situation so that the candidate could communicate with the examiner, while playing certain appointed roles. This part examined the appropriateness of their oral expression and reflected the social and cultural characteristics of language.

3.4.2. Scoring standards and methods

The scoring standards of the oral test undertaken in this research fully reflected the priority of communicative competence. Importance was attached not only to the accuracy and informativeness in oral expression but also to the fluency and appropriateness of the spoken English. The scoring standards included three groups of items.

(1) Group 1: Language accuracy and range
   (a) Language accuracy refers to the precision of a candidate's pronunciation, intonation, grammar, and vocabulary [3].
   (b) Language range refers to the complexity and scope of vocabulary and grammatical structures used by the candidate [4].
(2) Group 2: Discourse length and coherence
   (a) The length of discourse refers to how much a candidate has contributed to the communication in the whole exam and how much he/she has spoken.
   (b) Coherence refers to the ability of a candidate to speak for a long time in coherent speeches.
(3) Group 3: Flexibility and appropriateness
   (a) Flexibility refers to the ability of a candidate to cope with different situations and topics.
   (b) Appropriateness refers to the ability of a candidate to use accurate and appropriate language in different situations [5].

The test was scored by analytical methods based on the three groups of items mentioned above. Each group had a full score of 5 points and was presented in a scale of five grades. The examiner scored each group according to the marking standards, in which higher scores meant better the performance. The total score was the sum of the scores for each group, and the final score of the students' oral performance was the average of the total scores by the three examiners.

3.5. Statistical analysis

We measured and analyzed the results in a quantitative approach. SPSS 22.0 was used to evaluate the test results, and two analysis methods were used to draw conclusions.

3.5.1. Paired sample t-test

Paired samples refer to two sets of data obtained from two tests on the same sample or from tests on two identical samples under different conditions. The paired sample test is carried out to infer whether the mean values of such two groups of data are significantly different [6].

The pretest and posttest scores of the experiment class were two sets of data obtained from two tests on the same sample. Therefore, paired sample t-test was used to evaluate whether the oral English proficiency scores in the pretest and posttest were significantly different [7].

Likewise, the pretest and posttest scores of the control class were two sets of data obtained from two oral tests on the same sample. Therefore, paired sample t-test was used to evaluate whether the oral English proficiency scores in the pretest and posttest were significantly different.

3.5.2. Independent samples t-test

Independent samples refer to two groups of data obtained by measuring different samples [8]. Independent samples test is used to deduce whether there is significant difference between two groups of data [9]. The experiment class and the control class were considered different samples. Therefore, in the pretest and posttest, the test scores of the experiment class and the control class were evaluated using independent samples t-test, and the mean value and difference were compared to infer whether the effect of oral English teaching and learning in the experiment class under the instruction mode supported by digital technology was significantly different from that in the control class under the traditional teaching mode without the support of digital technology [10].

4. Qualitative study of experimental data in oral English performance

4.1. Analysis of the total oral scores in the experimental class

As for the analysis of the total scores in the oral pretest, the statistical results are shown in **Table 1**.

Table 1. Statistics for oral pretest in the experimental class

N	Minimum	Maximum	Mean	Std. deviation	Std. error mean
50	9.0	12.0	10.11	.44136	.06242

Since the full score that can be obtained in the oral test was 15, and the mean score was 10.11, the students' oral English performance was in middle level.

However, according to **Table 2**, we can witness a remarkable rise in the students' oral English performance. The average score in the posttest was 12.29, which was 2.18 points higher than that of the pretest. Also, both the minimum score (11.0) and the maximum score were higher than the corresponding ones in the pretest.

Table 2. Statistics for oral posttest in the experimental class

N	Minimum	Maximum	Mean	Std. deviation	Std. error mean
50	11.0	14.0	12.29	.55227	.07810

Concerning the distribution of scores, the majority of students achieved scores ranging from 9.5 to 10.5 in the pretest, while most of them achieved scores from 12.0 to 12.5 in the posttest. From the distribution of their scores, significant growth was seen in the posttest.

The paired sample t-test in **Table 3** confirmed that there was a significant difference between the scores in the pretest and the posttest ($P = 0.000 < 0.05$). As a result of oral English blended teaching, the students' oral proficiency improved noticeably.

Table 3. Paired sample t-test for the oral pretest and posttest in the experiment class (full score = 15)

	Paired differences					t	d.f.	Sig. (2-tailed)
	Mean	Std. deviation	Std. error mean	95% confidence interval of the difference				
				Lower	Upper			
Pair 1 Posttest-pretest	1.2600	.74396	.10521	1.0485	1.4714	11.98	49	.000

4.2. Analysis of the oral scores in each module in the experiment class

In a separate evaluation of each model in the oral test, we discovered that the posttest scores of the three modules (accuracy and range of language, discourse coherence and length, as well as appropriateness and flexibility) were higher than the pretest scores.

Tables 4 and **5** showed a significant improvement in the performance of students in language accuracy and range as well as flexibility and appropriateness. Although there were still a few grammatical and lexical slips in the posttest, these slips had trivial effect on students' communication. Through their performance in spoken English, we could see that the students had a relatively wide store of vocabularies, and their pronunciation was comparatively good. Besides, in most parts, the students were willing to participate in discussions and express their ideas in appropriate language. In the pretest, however, there were quite a few grammatical mistakes in the usage of English. At times, these mistakes would hinder normal communication. Most students did not have sufficient vocabulary and grammatical structures and were unable to complete the given task or actively engage in discussions.

Table 4. Paired sample t-test of the pretest and posttest scores in grammatical range and accuracy (total score = 5)

Test	N	Mean	Std. Deviation	t	Sig. (2-tailed)
Posttest	50	4.36	.9115	12.05	.010
Pretest	50	3.90	1.4233		

Table 5. Paired sample t-test of the pretest and posttest scores in flexibility and appropriateness (total score = 5)

Test	N	Mean	Std. Deviation	t	Sig. (2-tailed)
Posttest	50	4.47	.7174	7.893	.002
Pretest	50	3.96	2.0843		

According to **Table 6**, there were significant differences in the pretest and posttest scores in terms of discourse length and coherence. As shown in the posttest results, more students had developed the ability to think and talk in the second language. They were able to quickly extract appropriate vocabulary and terms from their memory, thus showing desirable fluency in oral expression. Pauses were also significantly reduced, and they were observed to be more active in conversations. A number of students mentioned that they tend to apply Chinese thinking in English communication. This was the major reason they found it difficult to communicate in English. However, after a semester of lectures and practices, especially through many intensive language exchanges with their lecturers and other students under blended teaching, they began to break away from the Chinese thinking and express themselves better in English.

Table 6. Paired sample t-test of the pretest and posttest scores in discourse length and coherence (total score = 5)

Test	N	Mean	Std. Deviation	t	Sig. (2-tailed)
Posttest	50	4.27	.5284	5.371	.002
Pretest	50	3.98	.7718		

4.3. Analysis of the oral scores in the control class

As for the analysis of the scores in the oral pretest, the statistical results are shown in **Table 7**.

Table 7. Statistics for the oral pretest in the control class

N	Minimum	Maximum	Mean	Std. Deviation	Std. Error Mean
50	8.79	11.51	9.97	.42787	.06197

Since the full score that can be obtained in the oral test was 15, and the mean score was 9.97, the students' oral English performance was in middle level.

After one semester of teaching and learning oral English, the average score in oral English improved by 0.46 points from 9.97 to 10.43 (**Table 8**). Although the mean score increased, it was not significant.

Table 8. Statistics for the oral posttest in the control class

N	Minimum	Maximum	Mean	Std. Deviation	Std. Error Mean
50	8.91	12.02	10.43	.52144	.07213

It can be clearly seen in **Table 9** that there was no significant difference between the pretest and posttest results in the control class. The data showed that under conventional instruction, there was no significant improvement in the students' oral English skills.

Table 9. Paired sample t-test for the oral pretest and posttest in the control class (full score = 15)

	Paired differences					t	d.f.	Sig. (2-tailed)
	Mean	Std. deviation	Std. error mean	95% confidence interval of the difference				
				Lower	Upper			
Pair 2 Posttest-pretest	3.288	.3890	.945	1.0002	1.3433	1.112	49	.299

4.4. Comparison of the posttest oral scores between the experiment class and the control class

As shown in **Table 10**, the difference in the mean posttest oral scores between the experiment class and the control class was 1.87 points. By means of the test, a noteworthy difference was observed in the oral English proficiency between the two groups. As a result of the blended instruction mode, the oral English proficiency of the students in the experiment class improved noticeably, whereas the proficiency of the students in the control class showed no remarkable improvement. Therefore, the hypothesis that blended teaching supported by digital technology had evident advantages over traditional teaching in the development of university students' oral English performance is verified through this empirical study.

Table 10. Paired sample t-test for the posttest oral scores between the experiment class and the control class (full score = 15)

Test	N	Mean	Std. deviation	t	Sig. (2-tailed)
Experiment class	50	12.29	.5009	6.149	.001
Control class	50	10.42	.6875		

5. Conclusion

Through the integration of learning in- and out-of-class, oral English education was more systematic. Students generally held a positive attitude toward extracurricular oral English learning supported by digital technology. Although it took up their spare time, the majority of students thought it worthwhile. They believed that extracurricular learning, as a useful complement to in-class learning, would produce a synergistic effect.

Disclosure statement

The authors declare no conflict of interest.

Author contributions

Z.W. and N. B. conceived the idea of the study. Z.W. and Y.H. wrote the first draft of the paper. Z.W. and Q.T. revised the format of the article.

References

[1] Wang Q, Castro D, 2010, Classroom Interaction and Language Output. English Language Teaching, 3(2): 175–186.

[2] Meredith R, Catherine S, 2020, Analyzing Input Quality Along Three Dimensions: Interactive, Linguistic, and Conceptual. Journal of Child Language, 47(1): 5–21.

[3] Allaw E, McDonough K, 2019, The Effect of Task Sequencing on Second Language Written Lexical Complexity, Accuracy, and Fluency. System, 85: 102–104.

[4] Von S, Motha S, Kubota R, 2020, Race and Language Teaching. Language Teaching, 53(4): 391–421.

[5] Rajesh V, Venkatesh L, 2019, Preliminary Evaluation of a Low-Intensity Parent Training Program on Speech-Language Stimulation for Children with Language Delay. International Journal of Pediatric Otorhinolaryngology, 122: 99–104.

[6] Şahin M, Aybek E, 2019, Jamovi: An Easy to Use Statistical Software for the Social Scientists. International Journal of Assessment Tools in Education, 6(4): 670–692.

[7] Mee W, Chua C, 1991, Regression Toward the Mean and the Paired Sample T Test. The American Statistician, 45(1): 39–42.

[8] Gerald B, 2018, A Brief Review of Independent, Dependent and One Sample T-Test. International Journal of Applied Mathematics and Theoretical Physics, 4(2): 50–54.

[9] Rietveld T, van Hout R, 2015, The T Test and Beyond: Recommendations for Testing the Central Tendencies of Two Independent Samples in Research on Speech, Language and Hearing Pathology. Journal of Communication Disorders, 58: 158–168.

[10] Krzywinski M, Altman, N, 2014, Comparing Samples – Part I: Robustly Comparing Pairs of Independent or Related Samples Requires Different Approaches to the T-Test. Nature Methods, 11(3):

215–217.

Publisher's note

Bio-Byword Scientific Publishing remains neutral with regard to jurisdictional claims in published maps and institutional affiliations.

Journal of Contemporary Educational Research, 2023, Volume 7, Issue 2
http://ojs.bbwpublisher.com/index.php/JCER
ISSN Online: 2208-8474
ISSN Print: 2208-8466

Ideological and Political Teaching Case Design and Research Based on the Course Simulation Electronic Technology Experiment

Meiyi Chen*, Wei Yang, Xin Hao, Shunyu Long, Pengfei Zhong

College of Marine Information Engineering, Hainan Tropical Ocean University, Sanya 572022, Hainan Province, China

****Corresponding author:*** Meiyi Chen, chenmeiyi25@hntou.edu.cn

Copyright: © 2023 Author(s). This is an open-access article distributed under the terms of the Creative Commons Attribution License (CC BY 4.0), permitting distribution and reproduction in any medium, provided the original work is cited.

Abstract: As critical measures to educate and cultivate people's morality, "Ideology and Politics of Course" has gradually become the focus in actual undergraduate education research in universities. Targeting the single ideological and political education mode and students' lack of interest in experimental courses, this paper, through various links, including pre-class preview, in-class teaching, and after-class data analysis, takes the common emitter single tube amplifier experiment as an example to organically integrate the excavated ideological and political elements with practical operation and carry out teaching case design and practice; realize the improvement of students' learning initiative and problem-analysis ability; and achieve the purpose of cultivating people throughout the whole process and in a comprehensive direction.

Keywords: Ideology and politics; Simulation electronic technology experiment; Teaching design

Online publication: February 24, 2023

1. Introduction

The growth and development of college students, as the main driving force of realizing the Chinese dream and the core of building socialism with Chinese characteristics, have always been the top priority of the party and the state. As a result of the increasing exchanges between China and various countries in the world, the local education environment, especially the mode of moral education, is now exposed to various problems. From the perspective of educating people, college students are in a critical period of mental maturity; thus, they are extremely malleable. This explains why colleges and universities have always been the main place for national ideological and political education as well as party building. In order to keep pace with the times, practitioners in the field of ideological and political education in colleges and universities are obliged to change their working concept, re-structure and upgrade the established education mode, as well as double their effort in guiding students to help them grow in an all-rounded way. "Ideology and Politics of Course," which was proposed at the 2016 National Conference on Ideological and Political Work in College and Universities, has been the focal point of attention in the education world. Integrating ideological and political education with professional curriculum and putting their attribute of educating to good use allow us to chart courses for ideological and political education in the new age. Revolving around fostering character and civic virtue answers to having ideology-and-politics-permeated teaching to educate students, further stimulate their learning motivation, and enhance their awareness of respective majors throughout the process [1].

The growing research on "Ideology and Politics of Course" mainly lies in mining the significance and ways of ideological and political elements in professional courses as well as the feasible approaches and precautions for their integration. This paper, grounded on literature review and the requirements of undergraduate education personnel training, probes into the "Simulation Electronic Technology Experiment" in terms of ideological and political teaching design. As a core compulsory course in the practice of undergraduate electronic information, it makes a crucial adjunct to theoretical teaching, shines on full-fledged experimental design, stresses the cultivation of hands-on ability and innovative consciousness, and goes hand-in-hand with theoretical teaching to ensure favourable teaching outcomes. With regard to this, the priority should be to extract the ideological and political elements of this highly practical basic course and integrate it into every link of the experimental design, thereby honing the skills of teachers in educating and equipping students with professional knowledge and skills as well as professionalism and craftsmanship. Based on the "Simulation Electronic Technology Experiment" course offered by Hainan Tropical Ocean University, we selected the classic single-tube common-emitter amplifier circuit experiment for an ideological and political teaching case design.

2. Course profile and academic analysis

"Simulation Electronic Technology Experiment," as one of the earliest professional experimental courses designed for freshmen in Electronic Information, assumes a basic role in their studies for follow-up professional courses and attendance in technical innovation competition. **Table 1** lists the course profile.

Table 1. Hainan Tropical Ocean University's "Simulation Electronic Technology Experiment" course profile

Course	Simulation Electronic Technology Experiment	
Type	Basics (required)	
Semester	2nd semester	
Major	Electronic Information	Vessel Electronics
Credits/hours	1/17	0.5/18
Prerequisite courses	"Circuit Principles," "University Physics," and "Advanced Mathematics"	
Follow-up course	"Digital Electronic Technology"	

As an aid to "Simulation Electronic Technology," this independent course is more intuitive, practical, and comprehensive than the theoretical one. This earns it an important position and role when it comes to the cultivation of students' application and innovation skills, engendering it a considerable practical link in the curriculum system of the Electronic Information major. The experimental framework of the course enables students to (1) be skilled in the use of common electronic instruments; (2) master the principle and performance index test method of the basic amplifier circuit in simulation electronic technology; (3) and grasp diverse experimental methods and means in virtue of Multisim simulation, experimental box wiring, and breadboards construction. The "Simulation Electronic Technology Experiment" course offered by Hainan Tropical Ocean University is delivered in 16 class hours, with each of the 8 experimental items lasting 2 class hours or 90 minutes. Within 90 minutes, the teacher has to explain the experimental principles and the use of instruments as well as set aside enough time for students to exercise their practical skills. The observation and analysis of teaching practices have revealed several issues: (1) unfocused targets have raised a higher threshold for implementation; (2) poor teaching contents have led to inconsistency; (3) outdated teaching methods, empty-talks, and talks that go awry are common [2]. On the other side, students (1) lack initiative, concentration, and efficiency; (2) are weak in teamwork and short of communication

skills; (3) are unable to carry out operation well and are in need of safety and environmental protection awareness. In response to the said problems, we integrated ideological and political elements into the course to redesign the teaching plan.

The case project of the classic transistor common emitter single tube amplifier experiment was arranged after "use of common electronic instruments," in which the first basic amplifier circuit is introduced into simulation electronic technology. There are two reasons that this project was selected for the teaching case design

2.1. Bridging the preceding and the following

Given a certain mastery of commonly used electronic instruments, there are follow-up courses for the performance indicators of the amplifier circuit. The simulation electronic technology experiment consists of three major steps. In Step I, students are encouraged to preview according to the experimental instruction book; in Step II, students must use the experimental box to connect the experimental circuit and test it by relying on their preview report; in Step 3, students are required to sort out the experimental data and compile the experimental report [3]. Despite the course's ability to fulfil the teaching tasks within the limited time, there are still difficulties in arousing students' learning interest, independent thinking skills, and innovative skills. The modular design of the experimental box saves students from trouble of picking components to build the circuit; they only need to plug and unplug the wires as well as adjust the adjustable resistance step-by-step to obtain the relevant voltage parameters and complete the task. They gain very little due to the limited access to components and a lack of intuitive practice [4]. To enable students to experience hands-on fun, breadboards are used. In that way, students can design or refer to the given circuit to select and build components according to specific conditions. The application of breadboards requires familiarity with its use and precautions. For instance, in the case of wiring, the negligence to arrange the components properly during wiring may lead to over-selected wires or a wire "overpass," resulting in circuit failure. Tanglesome designs and amplifier circuit with many components may terrorize students with poor experience in breadboards, knowledge reserves, and skills. From this, the theme of the case design was set as "cultivating professionalism and inheriting the spirit of ingenuity—transistor common emitter single tube amplifier." On the one hand, easy-to-medium levels of difficulty may be easier for students to get started so as to mobilize their learning enthusiasm and help them develop a habit of following standard operations; on the other hand, the transistor common emitter single tube amplifier is the most basic knowledge point and core content of "Simulation Electronic Technology." Understanding and mastering such knowledge would have a direct impact on subsequent learning of other forms of amplifier circuits.

2.2. Integrating excavated ideological and political elements with course knowledge

"Simulation Electronic Technology," which is a basic course with strong engineering nature, is packed not only with various professional basic theories, but also rich ideological and political elements. In the transistor common emitter single tube amplifier course, efforts should be invested in determining the right way to bridge experiments and mainstream values organically so as to enable education in an all-rounded way through the mining of ideological and political elements from the objective, rigorous and meticulous scientific view, teamwork, exploration and innovation, future career development, and a sense of reverence for the system, with a variety of ideas.

3. Teaching plan design

Students are still considered the main body of education in a teaching plan that incorporates ideological and political elements. In practice, it means to understand the actual situation of students, analyze their weak points, and carry out teaching and supplementation according to their needs. In addition, oriented by

employment, it increases certain educational links including students' professionalism and responsibility awareness, locates the entry point, and organically integrates ideological and political elements into teaching, thus "moisturizing and silencing" the ideological and political course and assisting students in forming the correct core values.

3.1. Teaching objectives

(1) Knowledge and skill objectives

The transistor common emitter single tube amplifier experiment enables students to learn the debugging method of the amplifier's static operating point and the testing method of amplifier voltage magnification, input resistance, output resistance, and maximum undistorted output voltage so that they can analyze the effect of the quiescent operating point on the performance of the amplifier.

(2) Process and method objectives

The training of this experiment enables students to skilfully use the electronic equipment commonly applied in simulation circuit experiments; understand circuit schematic diagrams and reasonably arrange components on a breadboard; as well as learn to think independently, analyze causes, and solve problems.

(3) Emotions, attitudes, and values

Independent experiments are designed to enhance students' interest in professional learning, inherit the "spirit" of scientists, clarify duties and responsibilities of scientific and technological power, as well as establish a firm belief in striving for the cause of socialist modernization for life. All these are meant to improve students' safety awareness and cultivate their craftsman spirit of being rigorous, down-to-earth, conscientious, meticulous, and striving for perfection.

3.2. Key points and difficulties

(1) Key points

Building a circuit with a breadboard teaches students to identify the pin arrangement of the crystal triode and the methods of connecting other components correctly so that they can use the connection points in the breadboard to arrange components reasonably and master the methods of measuring the dynamic parameters of the amplifier circuit.

(2) Difficulties

The modulation of the static operating point locates the causes for the distortion of the waveform.

3.3. Teaching methods

Revolving around "proposing → dissecting → discussing → tackling tasks," guidance and enlightenment, independent inquiry, and group discussions are the three methods applied to stimulate students' interest in experimental courses and guide them to form correct socialist values with Chinese characteristics while cultivating their professional skills, so as to realize ideological and political education.

3.3.1. Guidance and enlightenment

Directed questions, such as "What are the main factors affecting the static operating point of transistor common emitter single tube amplifiers?" and "What are the methods for stabilizing the static operating point?", in the experimental preview stage enable students to think purposefully. These questions aim at clarifying the purpose of the experiment and guiding students to reflect on the theoretical knowledge learned.

3.3.2. Independent inquiry

In contrast to previous experiments, the emphasis is on strengthening students' independent exploration.

Different experimental circuits and parameters are given to the students for them to analyze the function of each component in the circuits during the preview stage, verify them on the Multisim software, and subsequently select discrete components to build experimental circuits on a breadboard. This helps students solve the problem of being unable to start when it comes to building a circuit for the first time [5].

3.3.3. Group discussion

In order to ensure that students understand the necessity of a stable static operating point [6], each group of students are required to complete the construction of two experimental circuits by themselves, and the teachers guide the students to observe the experimental phenomena caused by different experimental circuits. Each group analyzes and discusses the obtained experiment data and compiles an experimental report.

3.4. Teaching process

The teaching theme "cultivating professionalism and inheriting the spirit of ingenuity— transistor common emitter single tube amplifier" consists of pre-class preview, in-class teaching, and after-class data analysis, as shown in **Figure 1** (on the following page).

3.4.1. Pre-class preview

Before the class, the experimental instruction book, breadboard, and precautions for the use of common electronic instruments are uploaded to the Wisdom Tree platform, and students are required to login to the platform to complete their pre-class tasks, covering PowerPoint (PPT) and practical operation videos as well as thought-provoking questions in the "Preview Part." If students have any queries during online learning, they may communicate with their teachers through their respective QQ groups. Other than the preview tasks on the Wisdom Tree platform, the students also need to complete the construction of an experimental circuit in advance. First, the students were first divided into groups of four. The experimental circuit of 2 students is shown in **Figure 2**, and the experimental circuit of the remaining 2 students is based on **Figure 2**, but without the RB1, RE and CE components. All students were allowed to access the breadboard through the video uploaded by the teacher and use the components they received according to the experimental circuit shown in **Figure 2**. Through guidance via questions and group discussions before class, the students were guided to define the experimental principles and experimental procedures step-by-step in order to stimulate their learning interest and teamwork awareness.

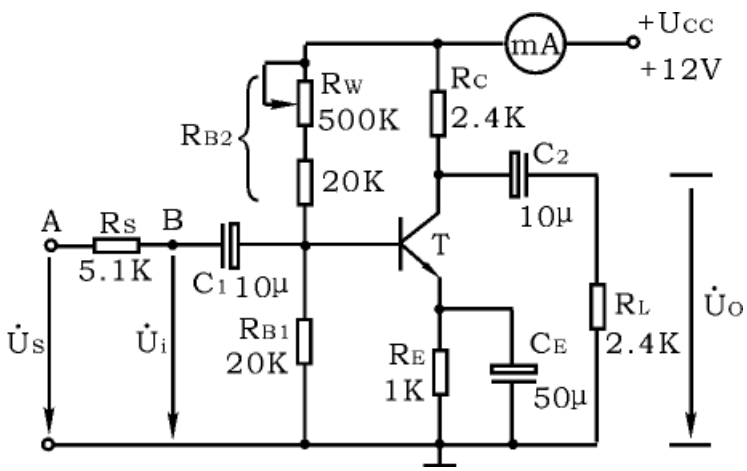

Figure 2. Common emitter single tube amplifier experimental circuit

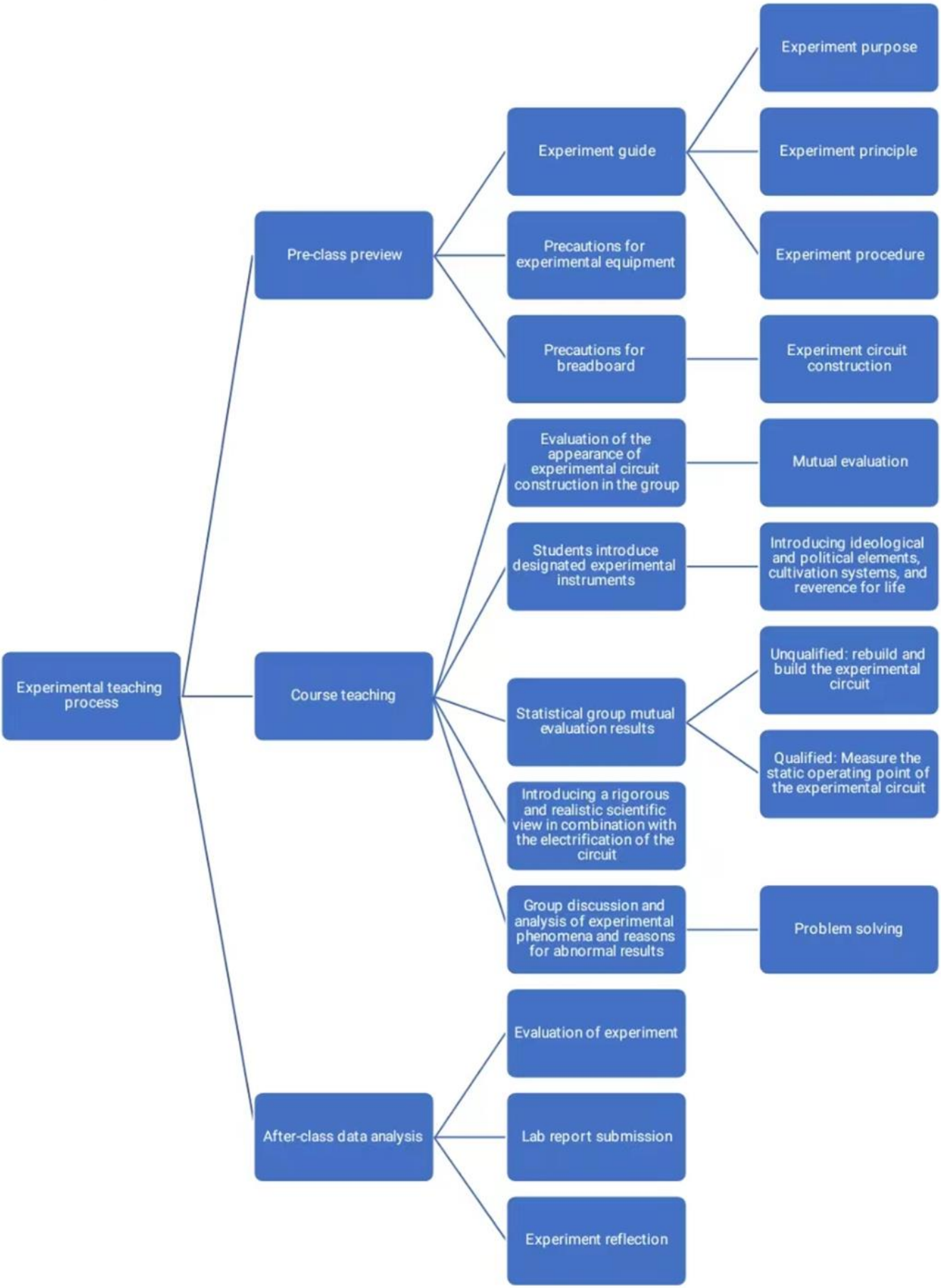

Figure 1. Experimental teaching process

3.4.2. In-class teaching

The main purpose of offline teaching is to check students' wiring and experimental outcomes. By checking the construction of the circuit, it helps to prepare students for the experiment. Teachers should remind students to standardize the use of instruments and the detection and elimination methods of common faults. The in-class teaching is specifically divided into five stages.

(1) Assessing the appearance of the built circuit

Students are required to assess the experimental circuit on the breadboard built by their partners within the group, such as whether the components and wires are close to the bread, *etc*. The scoring standards are shown in **Table 2**. Each group then compares their works with those done by other groups, so as to select the best one. The team with the highest score is awarded bonus points.

Table 2. Experimental circuit scoring standards

No.	Main content	Full score	Score
1	When the breadboard is turned upside down, no components or wires fall off.	10	
2	The power supply area is clearly divided, in which the red wire is used for positive power supply, whereas the black wire is used as the ground wire.	10	
3	The wires are tightly attached to the breadboard, and there are no components or wires straddling other components or wires.	20	
4	For connected wires, no bare wires are exposed. The direction of the wires is horizontal and vertical, and the distance is short.	30	
5	The layout is similar to the schematic diagram, and the layout is compact, neat, and pleasing to the eye.	30	
Full score		100	

(2) Enhancing students' safety awareness and emphasizing the importance of standardizing the use of experimental equipment

Each group is required to select a representative who will be assisted by the remaining members. The representative is required to introduce the experimental instrument and equipment designated by the teacher, focusing on the function, precautions, *etc*. Thereafter, the teacher summarizes the operation steps and key points of the reported instrument. Safety is no small matter. Non-standard operations, such as continuous power plugging and unplugging components, random connection of wires, and not turning off the instrument after the experiment, will all lead to laboratory safety accidents. Textbook experimental operation requirements and a warning video on 12 laboratory accidents that have occurred in colleges and universities in the past 10 years are explained and shown to the students. The vivid pictures educate students not to cause serious incidents by trying to save trouble or take it for granted as well as help them develop a sense of awe for rules and regulations and safety precautions.

(3) Assigning different tasks according to the self-evaluation and mutual evaluation results

Groups that scored less than 80 should analyze and rectify their experimental circuit in strict accordance with the scoring standards, while those with better performance should re-check whether the component pins and wiring are correct and then connect the direct current (DC)-regulated power supply to measure the static operating point of the experimental circuit.

(4) Introducing a rigorous and realistic scientific view based on the results of electrification of the experimental circuit

Years of teaching practices have concluded common misunderstandings in the inspection of experimental circuits shared by students: they generally believe that a circuit with correct external

connections is also well-connected internally. Hence, they often muddle through in the review of experimental circuits, fail to check whether each connection is correct or not, and even neglect checking whether the components connected to each pin of the triode are correct. Poor timely correction increases the likelihood of safety accidents. In order to eliminate such hazards, teachers should explain the "combination of two bombs" test in 1966, when a young soldier was worried about a 5 mm long white hair causing poor electrification of the projectile body, so he took great pains to pick out the white hair. As a result, he was commended by Qian Xuesen. This typical case of rigor and truth-seeking is often used to educate aerospace scientific and technological personnel and also students to treat science seriously, strictly, and rigorously. During experiments, only circuits with correct external wiring and up-to-standard internal connection can operate safely and reliably.

(5) Discussing and reporting the experimental phenomena and results in groups
Groups with no experimental phenomena or with abnormal experimental data should be guided to think about the possible reasons for the abnormality and encouraged to solve them themselves. In most cases, the main causes are device failure, wiring errors, and incorrect test methods. By following certain inspection steps, the students will eventually determine the cause of the failure. Offering discussions on troubleshooting during the experiment enables students to master certain solutions, cultivates their professionalism, and improves their innovation ability.

3.4.3. After-class data analysis

After in-class teaching, students are required to summarize, analyze, and process the experimental data. They should be able to sum up the experimental principles and procedures, analyze data errors, put forward their own opinions, and complete the experimental report. Through the analysis and discussion of data differences, they will be able to expand and deepen the experimental content as well as strengthen their independent thinking and research ability.

3.5. Teaching reflection

After incorporating ideological and political elements into the teaching plan, the goals of the Simulation Electronic Technology Experiment course are clearly defined: solidifying students' professional knowledge and skills as well as moral education, which includes emotions, attitudes, and values. Materials of moral education are mainly sought from socialist core values, academic accomplishment, family and country feelings, and craftsman spirit to stimulate scientific and philosophical thinking among students. The teaching method of moral education has been reformed in view of being passive in reasoning by post-00 students. Through case analysis, group discussion, and scenario simulation, students are encouraged to participate in teaching activities. Teaching practice has registered significantly improved learning environment. Students have changed from having no way to begin with to a clear idea of experiments and knowing the next steps, rather than relying on their teachers to guide and troubleshoot for them. Despite the ideal design, an existing gap continues to separate the ideal from reality. As an example, during teacher-student interaction or group discussion, the participants' engagement, is poor and the ideological and political elements introduced have yet to be unfolded at length due to time constraints; as a result, the students' perceptions and understandings are limited. Moreover, the teachers have to improve their mastery of ideological and political theories. All these have adversely impacted the ideological and political teaching reform. As a follow-up, online questionnaire surveys should be included into the preview link, and teaching activities should be arranged according to the needs of the students. Furthermore, efforts should be doubled to extract the ideological and political elements from the main issues students are concerned about, so that they can resonate with the topics and thus show more interests. Teachers should take the initiative to participate in online and offline ideological and political theory training, make the best of both

worlds, and improve the existing moral education teaching methods as well as their own ideological and political education capabilities.

4. Conclusion

By interpreting and studying the characteristics of the school's "Simulation Electronic Technology Experiment" course, we have designed teaching cases; used teaching methods, such as guidance and enlightenment, independent inquiry, and group discussions; and organically integrated the excavated ideological and political elements into practices. In the actual process, we found that it worked by arousing students' learning interest and ability to analyze and solve problems as well as permeating the ideological and political work through the whole process of education and teaching. The pre-review stage, however, fell short of expectations on the group discussion report. This will be continuously improved in the later stage. The reform of practical teaching requires long-term efforts. The question here is how to organically integrate relevant knowledge with scientific development, social life, and other ideological and political elements, and naturally intersperse them in practical teaching and design teaching methods so as to stimulate active learning among students. This will be our main task in the future.

Funding

This paper was supported by the 2021 School-Level Education Reform Project of Hainan Tropical Ocean University Fund (RHYjg2021sz03).

Disclosure statement

The authors declare no conflict of interest.

References

[1] Zhang J, 2020, Ideological and Political Teaching Practice and Exploration of "Simulation Electronic Technology" Course. Light Industry Science and Technology, 36(11): 187–189.

[2] Chen L, 2022, Research on Teaching Case Design of "Circuit Principle" Course Based on the Ideological and Political Concept. Industry and Information Education, 5: 57–60.

[3] Zhang Y, 2021, Case Study on Ideological and Political Teaching of Analog Electronic Technology Course. Modern Commerce and Industry, 7: 148–149.

[4] Yan S, Cao L, 2021, Reform and Practice of Project-Based Electronic Technology Experiment Course. China Modern Education, 3: 54–56.

[5] Zhang W, 2017, Exploration and Practice of DIY-based "Integration of Theory and Practice" in "Simulation Electronic Technology". Journal of Ningbo Institute of Education, 19(4): 96–99.

[6] Tong S, Hua C, 2006, Fundamentals of Simulation Electronics Technology, Higher Education Press, Beijing.

Publisher's note

Bio-Byword Scientific Publishing remains neutral with regard to jurisdictional claims in published maps and institutional affiliations.

Author Guidelines

Before your submission, please check that your manuscript has been prepared in accordance to the step-by-step instructions for submitting a manuscript to our online submission system. We recommend that you keep this page open for your reference as you move through the submission process.

If there are any differences in author guidelines between the print and online version, it is recommended that authors refer to the online version for use.

Manuscript Format

Journal of Contemporary Educational Research accepts manuscript that is in MS Word or LaTeX format. All manuscripts must be written in clear, comprehensible English. Both American and British English are acceptable. Usage of non-English words should be kept to a minimum and all must be italicized (except for e.g. and i.e.) If you have concerns about the level of English in your submission, please ensure that it is proofread before submission by a native English speaker or a scientific editing service.

Cover letter

All submissions for *Journal of Contemporary Educational Research* should include a cover letter as a separate file. A cover letter should contain a brief explanation of what was previously known, the conceptual advancement with the findings and its significance to broad readership. The cover letter is confidential and will be read only by the editors. It will not be seen by reviewers.

Title

The title should capture the conceptual significance for a broad audience. The title should not be more than 50 words and should be able to give readers an overall view of the paper's significance. Titles should avoid using uncommon jargons, abbreviations and punctuation.

List of Authors

The names of authors must be spelled out rather than set in initials with their affiliations footnoted. Authors should be listed according to the extent of their contribution, with the major contributor listed first. All corresponding authors (maximum 2) should be identified with an asterisk. Affiliations should contain the following core information: department, institution, city, state, postal code, and country. For contact, email address of only one corresponding author is expected within the manuscript. Please note that all authors must see and approve the final version of the manuscript before submitting.

Abstract

Articles must include an abstract containing a maximum of 200 words. The purpose of abstract is to provide sufficient information for a reader to choose either to proceed to the full text of the article. After the abstract, please give 3-8 key words; please avoid using the same words as those already used in the title.

Section Headings

Please number all section headings, subheadings and sub-subheadings. Use boldface to identify major headings (e.g. **1**, **2**, **3**, etc.) and subheadings (e.g. **1.1**, **1.2**, **2.1**, **2.2** etc.) For the sub-subheadings, please distinguish it further using non-boldface numbers in parenthesis (e.g. (1), (2), (3), etc.)

Introduction

Introduction should provide a background that gives a broad readership an overall outlook of the field and the research performed. It tackles a problem and states its important regarding with the significance of the study. Introduction can conclude with a brief statement of the aim of the work and a comment about whether that aim was achieved.

Materials and Methods

This section provides the general experimental design and methodologies used. The aim is to provide enough detail to for other investigators to fully replicate your results. It is also required to facilitate better understanding of the results obtained. Protocols and procedures for new methods must be included in detail to reproduce the experiments.

Ethics

Ethics information, including IACUC permit numbers and/or IRB name, if applicable. This information should be included in a subheading labelled "Ethics Statement" in the "Methods" section of your manuscript file, in as much detail as possible.

Results

This section can be divided into subheadings. This section focuses on the results of the experiments performed.

Discussion

This section should provide the significance of the results and identify the impact of the research in a broader context. It should not be redundant or similar to the content of the results section.

Conclusion

Please use the conclusion section for interpretation only, and not to summarize information already presented in the text or abstract.

Conflict of Interest

All authors are required to declare all activities that have the potential to be deemed as a source of competing interest in relations to their submitted manuscript. Examples of such activities could include personal or work-related relationships, events, etc. Authors who have nothing to declare are encouraged to add "No conflict of interest was reported by all authors" in this section.

Funding

Authors should declare all financial and non-financial support that have the potential to be deemed as a source of competing interest in relations to their submitted manuscript in this section. Financial supports are generally in the form of grants, royalties, consulting fees and more. Examples of non-financial support could include the following: externally-supplied equipments/biological sources, writing assistance, administrative support, contributions from non-authors etc.

Appendix

This section is optional and is for all materials (e.g. advanced technical details) that has been excluded from the main text but remain essential to readers in understanding the manuscripts. This section is not for supplementary figures. Authors are advised to refer to the section on 'Supplementary figures' for such submissions.

Text

The text of the manuscript should be in Microsoft Word or Latex. The length of the manuscript cannot be more than 50000 characters (inclusive of spaces) or approximately 7000 words.

Nomenclature for genes and proteins

This journal aims to reach researchers all over the globe. Hence, for both reviewers' and readers' ease in comprehension, authors are highly encouraged to use the appropriate gene and protein nomenclature. Authors may prefer to utilize resources such as http://www.ncbi.nlm.nih.gov/gene

Figures

Authors should include all figures into the manuscript and submit it as 1 file in the OJS system. Reference to the "Instructions for Typesetting manuscript" is strongly encouraged. Figures include photographs, scanned images, graphs, charts and schematic diagrams. Figures submitted should avoid unnecessary decorative effects (e.g. 3D graphs) as well as be minimally processed (e.g. changes in

brightness and contrast applied uniformly for the entire figure). It should also be set against a white background. Please remember to label all figures (e.g. axis etc.) and add in captions (below the figure) as required. These captions should be numbered (e.g. **Figure 1**, **Figure 2**, etc.) in boldface. All figures must have a brief title (also known as caption) that describes the entire figure without citing specific panels, followed by a legend defined as description of each panel. Please identify each panel with uppercase letters in parenthesis (e.g. A, B, C, etc.)

The preferred file formats for any separately submitted figure(s) are TIFF or JPEG. All figures should be legible in print form and of optimal resolution. Optimal resolutions preferred are 300 dots per inch for RBG coloured, 600 dots per inch for greyscale and 1200 dots per inch for line art. Although there are no file size limitation imposed, authors are highly encouraged to compress their figures to an ideal size without unduly affecting legibility and resolution of figures. This will also speed up the process of uploading in the submission system if necessary.

The Editor-in-Chief and Publisher reserve the right to request from author(s) the high-resolution files and unprocessed data and metadata files should the need arise at any point after manuscript submission for reasons such as production, evaluation or other purposes. The file name should allow for ease in identifying the associated manuscript submitted.

Tables, lists and equations

Tables, lists and equations must be submitted together with the manuscript. Likewise, lists and equations should be properly aligned and its meaning clear to readers. Tables created using Microsoft Word table function are preferred. Place each table in your manuscript file right after the paragraph in which it is first cited. Do not submit your tables in separate files. The tables should include a concise but sufficiently explanatory title at the top. Vertical lines should not be used to separate columns. Leave some extra space between the columns instead. All tables should be based on three horizontal lines to separate the caption, header and body. A few additional horizontal lines MAY be included as needed (example below). Any explanations essential to the understanding of the table should be given in footnotes at the bottom of the table. SI units should be used.

Supplementary information

This section is optional and contains all materials and figures that have been excluded from the entire manuscript. This information are relevant to the manuscript but remains non-essential to readers' understanding of the manuscript's main content. All supplementary information should be submitted as a separate file in Step 4 during submission. Please ensure the names of such files contain 'suppl. info'.

In-text citations

Reference citations in the text should be numbered consecutively in superscript square brackets. Some examples:

1. Negotiation research spans many disciplines [3, 4].
2. This result was later contradicted by Becker and Seligman [5].
3. This effect has been widely studied [1–3, 7].

Personal communications and unpublished works can only be used in the main text of the submission and are not to be placed in the Reference section. Authors are advised to limit such usage to the minimum. They should also be easily identifiable by stating the authors and year of such unpublished works or personal communications and the word 'Unpublished' in parenthesis.

E.g. (Smith J, 2000, Unpublished)

References

This section is compulsory and should be placed at the end of all manuscripts. Do not use footnotes or endnotes as a substitute for a reference list. The list of references should only include works that are cited in the text and that have been published or accepted for publication. Personal communications and unpublished works should be excluded from this section.

For references in reference list, all authors must be stated. Authors referenced are listed with their surname followed by their initials. All references should be numbered (e.g. 1. 2. 3. etc.) and sequenced according to the order it appears as an in-text citation. References should follow the following pattern: Author(s) followed by year of publication, title of publication, full journal name in italics, volume number, issue number in parenthesis, page range and lastly the DOI (if applicable). If the referred article has more than three authors, list only the first three authors and abbreviate the remaining authors to italicized 'et al.' (meaning: "and others").

Journal

Journal article (print) with one to three authors

[1] Yao Y., Xia B. Application of Phase Frequency Feature Group Delay Algorithm in Database Differential Access. Computer Simulation, 2014, 31(12): 238-241.

Journal article (print) with more than three authors

[2] Gamelin F.X., Baquet G., Berthoin S., et al. Effect of high intensity intermittent training on heart rate variability in prepubescent children. European Journal of Applied Physiology, 2009, 105: 731–738.

Journal article (online) with one to three authors

[3] Jackson D., Firtko A., Edenborough M. Personal resilience as a strategy for surviving and thriving in the face of workplace adversity: a literature review. Journal of Advanced Nursing, 2009, 60(1): 1–9,

Journal article (online) with more than three authors

[4] Hargreave M., Jensen A., Nielsen T.S.S., et al. Maternal use of fertility drugs and risk of cancer in children—A nationwide population-based cohort study in Denmark. International Journal of Cancer, 2015, 136(8): 1931–1939.

Book

Book with one to three authors

[5] Schneider Z., Whitehead D., Elliott D. Nursing and midwifery research: methods and appraisal for evidence-based practice. 3rd edn. 2009, Elsevier Australia, Marrickville, NSW.

Book with more than three authors

[6] Davis M., Charles L., Curry M.J., et al. Challenging spatial norms. 2013, Routledge, London.

Chapter or Article in Book

[7] Knowles M.S. Independent study. In Using learning contracts. 1986, Jossey-Bass, San Francisco, 89–96.

Others

Proceedings of meetings and symposiums, conference papers

[8] Chang S.S., Liaw L. and Ruppenhofer J. (eds). Proceedings of the twenty-fifth annual meeting of the Berkeley Linguistics Society, February 12–15, 1999: general session and parasession on loan word phenomena. 2000, Berkeley Linguistics Society, Berkeley.

Conference proceedings (from electronic database)

[9] Bukowski R.M. Prognostic factors for survival in metastatic renal cell carcinoma: update 2008. Innovations and challenges in renal cancer: proceedings of the third Cambridge conference. Cancer, 2009, 115 (10): 2273, viewed 19 May 2009, Academic OneFile database.

Online Document with author names

[10] Este J., Warren C., Connor L., et al. Life in the clickstream: the future of journalism, Media Entertainment and Arts Alliance, 2008. viewed 27 May 2009, http://www.alliance.org.au/documents/foj_report_final.pdf

Online Document without author name

[11] Developing an argument n.d., viewed March 30 2009, http://web.princeton.edu/sites/writing

/Writing_Center/WCWritingResources.htm

Thesis/Dissertation

[12] Gale L. The relationship between leadership and employee empowerment for successful total quality management. 2000, University of Western Sydney.

Standard

[13] Standards Australia Online. Glass in buildings: selection and installation. AS 1288–2006. 2006, SAI Global database.

Government Report

[14] National Commission of Audit. Report to the Commonwealth Government, Australian Government Publishing Service, 1996, Canberra.

Government report (online)

[15] Department of Health and Ageing. Ageing and aged care in Australia, 2008, viewed 10 November 2008, http://www.health.gov.au/internet/main/publishing.nsf/Content/ageing

No author

[16] Guide to agricultural meteorological practices. 2nd edn, Secretariat of the World Meteorological Organization, 2010, Geneva.

Note: When referencing an entry from a dictionary or an encyclopedia with no author there is no requirement to include the source in the reference list. In these cases, only cite the title and year of the source in-text. For an authored dictionary/encyclopedia, treat the source as an authored book.

Submission Preparation Checklist

As part of the submission process, authors are required to check off their submission's compliance with all of the following items, and submissions may be returned to authors that do not adhere to these guidelines.

1. The submission has not been previously published, nor is it before another journal for consideration (or an explanation has been provided in Comments to the Editor).

2. The submission file is in OpenOffice, Microsoft Word, RTF, or WordPerfect document file format.

3. Where available, URLs for the references have been provided.

4. The text is single-spaced; uses a 12-point font; employs italics, rather than underlining (except with URL addresses); and all illustrations, figures, and tables are placed within the text at the appropriate points, rather than at the end.

5. The text adheres to the stylistic and bibliographic requirements outlined in the Author Guidelines, which is found in About the Journal.

6. If submitting to a peer-reviewed section of the journal, the instructions in Ensuring a Blind Review have been followed.

Integrated Services Platform of International Scientific Cooperation

Innoscience Research (Malaysia), which is global market oriented, was founded in 2016.Innoscience Research focuses on services based on scientific research. By cooperating with universities and scientific institutes all over the world, it performs medical researches to benefit human beings and promotes the interdisciplinary and international exchanges among researchers.

Innoscience Research covers biology, chemistry, physics and many other disciplines. It mainly focuses on the improvement of human health. It aims to promote the cooperation, exploration and exchange among researchers from different countries. By establishing platforms, Innoscience integrates the demands from different fields to realize the combination of clinical research and basic research and to accelerate and deepen the international scientific cooperation.

Cooperation Mode

Clinical Workers

In-service Doctors

Foreign Researchers

Hospital

University

Scientific institutions

BIQ-BYWORD
SCIENTIFIC PUBLISHING PTY LTD

OUR JOURNALS

The *Journal of Architectural Research and Development* is an international peer-reviewed and open access journal which is devoted to establish a bridge between theory and practice in the fields of architectural and design research, urban planning and built environment research.

Topics covered but not limited to:

- Architectural design
- Architectural technology, including new technologies and energy saving technologies
- Architectural practice
- Urban planning
- Impacts of architecture on environment

Journal of Clinical and Nursing Research (JCNR) is an international, peer reviewed and open access journal that seeks to promote the development and exchange of knowledge which is directly relevant to all clinical and nursing research and practice. Articles which explore the meaning, prevention, treatment, outcome and impact of a high standard clinical and nursing practice and discipline are encouraged to be submitted as original article, review, case report, short communication and letters.

Topics covered by not limited to:

- Development of clinical and nursing research, evaluation, evidence-based practice and scientific enquiry
- Patients and family experiences of health care
- Clinical and nursing research to enhance patient safety and reduce harm to patients
- Ethics
- Clinical and Nursing history
- Medicine

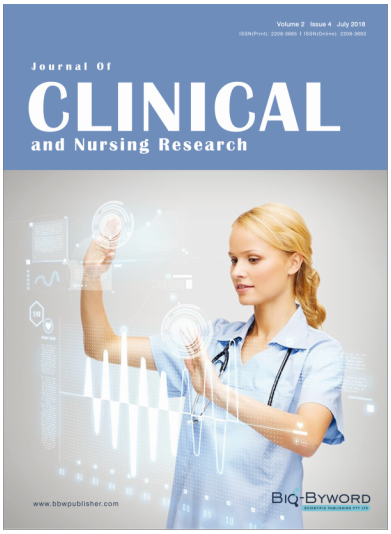

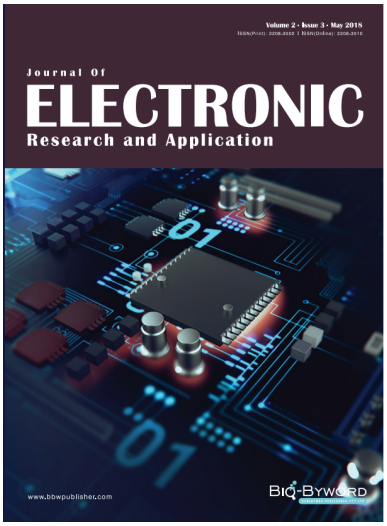

Journal of Electronic Research and Application is an international, peer-reviewed and open access journal which publishes original articles, reviews, short communications, case studies and letters in the field of electronic research and application.

Topics covered but not limited to:

- Automation
- Circuit Analysis and Application
- Electric and Electronic Measurement Systems
- Electrical Engineering
- Electronic Materials
- Electronics and Communications Engineering
- Power Systems and Power Electronics
- Signal Processing
- Telecommunications Engineering
- Wireless and Mobile Communication