Journal of Electronic Research and Application

Editor-in-Chief

Manivel K.

Mahendra Engineering College, India

BIO-BYWORD SCIENTIFIC PUBLISHING PTY LTD
(619 649 400)
Level 10
50 Clarence Street
SYDNEY NSW 2000
Copyright © 2021. Bio-Byword Scientific Publishing Pty Ltd.
Complimentary Copy

ISSN (ONLINE): 2208-3510
ISSN (PRINT): 2208-3502

Journal of Electronic Research and Application

Focus and Scope

Journal of Electronic Research and Application is an international, peer-reviewed and open access journal which publishes original articles, reviews, short communications, case studies and letters in the field of electronic research and application.

Topics covered but not limited to:

- Automation
- Circuit Analysis and Application
- Electric and Electronic Measurement Systems
- Electrical Engineering
- Electronic Materials
- Electronics and Communications Engineering
- Power Systems and Power Electronics
- Signal Processing
- Telecommunications Engineering
- Wireless and Mobile Communication

About Publisher

Bio-Byword Scientific Publishing is a fast-growing, peer-reviewed and open access journal publisher, which is located in Sydney, Australia. As a dependable and credible corporation, it promotes and serves a broad range of subject areas for the benefit of humanity. By informing and educating a global community of scholars, practitioners, researchers and students, it ndeavors to be the world's leading independent academic and professional publisher. To realize it, it keeps creative and innovative to meet the range of the authors' needs and publish the best of their work.

By cooperating with University of Sydney, University of New South Wales and other world-famous universities, Bio-Byword Scientific Publishing has established a huge publishing system based on hundreds of academic programs, and with a variety of journals in the subjects of medicine, construction, education and electronics.

Publisher Headquarter

BIO-BYWORD SCIENTIFIC PUBLISHING PTYLTD
Level 10
50 Clarence Street
Sydney NSW 2000
Website: www.bbwpublisher.com
Email: info@bbwpublisher.com

May 2021, Volume 5 Issue 3

Table of Contents

1 **Analysis of Maintenance and Inspection Status of Aeronautical Machinery and Improvement Countermeasures**
Wu Shuai

5 **Research on Self-Supervised Comparative Learning for Computer Vision**
Yuanyuan Liu, Qianqian Liu

18 **Innovation Ultrasonic Assistant Soldering in Electronics**
Vladimir Lanin

28 **Research on Audit Data Analysis under the Background of Big Data**
Li Zhang

34 **Exploration on Research Methods for Exploring Human Response to Luminous Environment with Chromogenic Windows Applied**
Runqi Liang, Yupeng Wu, Jiawei Yao, Yongming Zhang

Call for papers – Journal of Electronic Research and Application

ISSN (ONLINE): 2208-3510
ISSN (PRINT): 2208-3502

Submission open for July - 2021

Dear Researchers,

Dear Researchers,
Journal of Electronic Research and Application is an international, peer-reviewed and high quality open access journal which publishes original articles, reviews, short communications, case studies and letters in the field of electronic research and application.

The Journal Publishes in both online and print version. Journal of Electronic Research and Application publishes research and review paper in the field of:

- Automation
- Circuit Analysis and Application
- Electric and Electronic Measurement Systems
- Electrical Engineering
- Electronic Materials
- Electronics and Communications Engineering
- Power Systems and Power Electronics
- Signal Processing
- Telecommunications Engineering
- Wireless and Mobile Communication

The Journal of Electronic Research and Application is published by Bio-Byword Scientific Publishing Company, it is a fast growing peer-reviewed and open access journal publisher, which is located in Sydney, Australia. As a dependable and credible corporation, it promotes and serves a broad range of subject areas such as medicine, construction, education and electronics for the benefit of humanity. By informing and educating a global community of scholars, practitioners, researchers and students, it endeavour's to be the world's leading independent academic and professional publisher.

All Bio-Byword journals are free from all access barriers, allowing for the widest possible global dissemination of their manuscripts and highest possible citations. Bio-Byword publisher online submission will go through a rapid peer review and production, making the process of publishing simpler and more efficient, which benefit from its user friendly online submission system that reduces the overall time from submission to publication.

Acceptance Notification: Within 21 days from the date of manuscript submission

Send your manuscript to the editor at: **info@bbwpublisher.com**

With Warm Regards,
Editor-in-Chief
Dr. Manivel K.
Journal of Electronic Research and Application

Journal of Electronic Research and Application, 2021, Volume 5, Issue 3
http://ojs.bbwpublisher.com/index.php/JERA
ISSN Online: 2208-3510
ISSN Print: 2208-3502

Analysis of Maintenance and Inspection Status of Aeronautical Machinery and Improvement Countermeasures

Wu Shuai*

Aerodynamics Research Institute of Aviation Industry, Harbin 150001, Heilongjiang Province, China

Corresponding author: Wu Shuai, 19421516@qq.com

Abstract: In the daily operation process of airlines, aviation machinery maintenance and inspection work play an important role. At present, the quality of life of the people in our country is constantly improving. In daily travel, we have not only used cars, trains and other means of transportation, but also started to choose airplanes as the first choice in a higher frequency. In recent years, with the improvement of living standards, more and more people choose to travel during holidays. Therefore, the traffic volume of aviation aircraft is increasing year by year, but it also increases the risk of aviation aircraft failure, so it is particularly important to do a good job in the maintenance and inspection of aviation machinery. In this paper, according to the current situation of aviation machinery maintenance and inspection, put forward targeted improvement measures to ensure the safety and stability of China's aviation aircraft operation.

Keywords: Aeronautical machinery; Maintenance inspection; The scene; Improve the countermeasures

Publication date: May 2021; ***Online publication:*** May 31, 2021

1. Introduction

The continuous development of science and technology has also promoted the development of aviation enterprises. Aircraft is an important tool for people to travel, so it is necessary to guarantee the safety of aircraft operation. Nevertheless, the aviation aircraft in the daily operation of the problem will also occur, the need to carry out aviation machinery maintenance and inspection work. Therefore, aviation enterprises need to strengthen the maintenance and inspection of aviation machinery, improve the safety of aircraft flight, so as to ensure the safety of people's travel, and promote the healthy development of China's aviation industry.

2. Aviation machinery maintenance inspection status

2.1. Maintenance personnel operating level is low

Social and economic development, also gradually innovative flying chess manufacturing technology. In the actual manufacturing stage, mechanical equipment involves a wide range of knowledge, and in the process of aviation machinery maintenance and inspection, staff need to constantly improve their professional skills to meet the needs of aviation machinery maintenance and inspection. However, in view of the current status of aviation machinery maintenance and inspection, the professionalism of talents needs to be improved. The aviation enterprises do not clearly divide the responsibilities of maintenance work, which reduces the overall level of maintenance work and fails to guarantee the quality of aviation machinery equipment. For example, for the electrical equipment of aviation aircraft, professional operators need to be deployed in the operation and maintenance stage. Low-level maintenance personnel are only engaged in simple

maintenance work, and cannot repair mechanical and electrical equipment. Therefore, it will increase the harm of mechanical and electrical equipment maintenance, and seriously threaten the safety of subsequent flights.

2.2. The reserve of maintenance equipment is not sufficient

Maintenance equipment mainly includes aircraft maintenance tools and mechanical parts. In the process of aviation mechanical maintenance inspection, faces the problem of insufficient maintenance equipment reserves. The lack of certain maintenance tools, because of the space shuttle fault has diversified characteristics, different fault needs to use different maintenance tools, but because of the lack of some tools, it can't meet the demand of maintenance. Therefore, to extend the time of maintenance and reduce the maintenance quality, the mechanical parts were not enough, as the mechanical parts were used during the shuttle maintenance phase, and the old parts had to be replaced with the new parts. However, in the process of repairing the shuttle, mechanical parts are not sufficient enough to be replaced in time, which affects the aircraft's production flight and increases the working pressure of maintenance personnel.

2.3. The maintenance operation is not standardized

In the process of aviation machinery maintenance inspection, maintenance staff usually carry out maintenance work according to work experience. However, some maintenance personnel bear the heavy workload, because of the unreasonable arrangement of work content, resulting in the aviation machinery maintenance and inspection work is too chaotic. In addition, in the maintenance and inspection stage of aviation machinery, although the maintenance procedures were established in the early stage, they were not updated in time in the follow-up work. As the number and type of aviation machinery equipment increased, the initial construction workflow and system could not meet the requirements of maintenance work.

2.4. The maintenance system is not perfect

The guarantee of aviation machinery maintenance and inspection work is the maintenance system, but in practical work, aviation enterprises do not have a reasonable arrangement of maintenance tasks, leading to maintenance personnel to bear greater work pressure, not only need to clean up the space shuttle, but also to deal with aircraft failure. In addition, the inspection time arranged by aviation enterprises is unreasonable, which leads to the lack of reference for the actual work of maintenance personnel. Simultaneously, the number of maintenance times will be reduced, thus increasing the safety risks in the flight process of aircraft.

3. Common methods for maintenance and inspection of aviation machinery

3.1. Direct inquiry method

If aircraft mechanical failure happened will not be able to continue running, maintenance and repair personnel can use direct query method of the aviation machinery breakdown, keepers need and maintenance personnel and communication. Furthermore, the aircraft mechanical equipment running status, integrated all aspects of information, accurate judgment aircraft mechanical failure, and corresponding treatment measures are put forward

3.2. Intuitive visual method

Intuitive visual method is mainly to use the intuitive experience of staff to check aircraft mechanical equipment, staff need to fully understand the layout and connection of aircraft parts, through observation to determine the location of failure. First of all, it is necessary to determine the equipment failure by combining the mechanical state, etc. Secondly, it is necessary to determine the abnormal problem by combining the movement speed of the equipment, and finally, it is necessary to determine whether the water

and pollution inside the equipment occur by combining the mechanical seal. In addition, it is necessary to comprehensively check the operating state of the switch device.

3.3. Touch judgment method

Maintenance personnel use body parts to contact the mechanical equipment to feel whether the temperature of the equipment is normal. For example, in the normal working state, the temperature of the mechanical power adjustment tube is not obvious, while the temperature of the motor and the temperature of the transformer should be within 70℃. The maintenance personnel use the touch judgment method to find the overheating problem, which indicates that the mechanical circuit has a problem, and it is necessary to arrange professional personnel to timely repair the problem.

4. Improvement countermeasures for the maintenance and inspection status of aviation machinery

4.1. Build a professional team

The continuous development of science and technology has gradually improved the technical level and types of aviation aircraft, so it has also improved the professional level of aviation machinery maintenance and inspection. Aviation enterprises need to establish a professional aviation machinery maintenance and inspection team. Aviation enterprises need to comprehensively improve and assess the professional knowledge and skills of the mechanical maintenance team, maintain and maintain the aviation machinery normally, and comprehensively improve all work links to avoid secondary damage to the aircraft due to human factors. At the same time, we need to arrange a professional maintenance team to update the maintenance equipment, and use advanced equipment to complete the maintenance and inspection of aviation machinery, so that the quality of aircraft maintenance can be improved.

Aviation machinery maintenance and inspection work is related to the safety of aircraft flight, so maintenance personnel need to maintain a high sense of responsibility. Aviation enterprise need for maintenance personnel to carry out ideological education, regularly carry out safety education, to make it clear their work responsibilities, establish maintenance personnel post cultural awareness and consciousness of safety work, reduce the incidence of human error, not only can improve the professionalism of maintenance personnel, at the same time can enhance the level of aviation mechanical maintenance inspection.

4.2. Increase the reserve of maintenance equipment

Aviation enterprises need to ensure maintenance equipment reserves. Therefore, aircraft maintenance needs can be met to save maintenance time and improve overall work efficiency. On one hand, aviation enterprises need to reasonably add maintenance tools to effectively maintain aviation aircraft. Aviation enterprises need to purchase maintenance work according to work requirements, to comprehensively solve the problems of failure, and improve the safety of aviation aircraft operation. On the other hand, need to add reasonable mechanical parts as mechanical components are important parts of aircraft maintenance. Thus, aviation enterprises need to purchase a variety of mechanical parts, in order for timely maintenance. Additionally, they should pay attention to regular supplement mechanical parts at the same time, avoid because components are not enough to affect the actual work progress, this allows to reduce the maintenance personnel work pressure.

4.3. Enhancing technical support

Aeronautical aircraft have been constantly updated in recent years; thus, the aviation machinery maintenance inspection team has to learn new knowledge and skills constantly. Aviation enterprises need to organize regular training work to provide professional maintenance courses for mechanical maintenance

personnel. At the same time, they can take foreign exchanges and study, or hire professional experts to carry out knowledge lectures. Due to the particularity of aircraft equipment, some failures may be returned to the factory for maintenance, thus increasing the maintenance time and expenses. In order to improve the quality of aeronautical machinery maintenance and inspection work, maintenance personnel need to be trained to repeatedly operate and train important and difficult problems, so that actual faults can be solved efficiently.

4.4. Improve the maintenance system

Aviation enterprises need to improve the maintenance system of aviation machinery, improve the speed of aircraft maintenance, and ensure the safety of aircraft operation. On one hand, maintenance tasks need to be reasonably arranged, and maintenance time needs to be increased to reduce the work pressure of maintenance personnel, so that they can complete the maintenance tasks in an orderly manner. In each maintenance work, aviation enterprises should pay attention to the arrangement of more than two maintenance personnel, thereby to improve the level of aviation machinery maintenance. At the same time, it is necessary to formulate scientific operating standards, reduce the difficulty of maintenance work, and successfully complete the maintenance and inspection tasks of aviation machinery. On the other hand, it is necessary to stipulate the inspection time to prevent the failure of aviation machinery through inspection work. Aviation enterprises need to establish different time levels and arrange maintenance personnel to check the space shuttle regularly to reduce the incidence of failure and improve the stability of the operation of the aircraft.

5. Conclusion

Aiming at the current situation of aviation machinery maintenance and inspection, this paper puts forward targeted improvement countermeasures, whereby to enhance the level of aviation machinery maintenance and inspection, ensure the stability of aviation aircraft, and improve the safety of people's travel.

Disclosure statement

The author declares no conflict of interest.

References

[1] Guo L, 2021, Probe into Condition Based Maintenance of Aircraft Machinery Accessories Based on Big Data Technology. Aviation Maintenance & Engineering, (04):118-120.

[2] Li C, 2021, Analysis on Technical Transformation of Mechanical Processing in Aviation Industry. Chinese Internal Combustion Engine & Accessories, (06):206-207.

[3] Wang Y, Zhou B, 2020, Application of Modern Laser Technology in Aircraft Machining. Science and Technology Innovation, (15):144-145.

[4] Li B, 2020, Main Characteristics and Preventive Measures of Mechanical Accident of Aviation Equipment. Internal Combustion Engine & Accessories, (09):187-188.

[5] Lan Q, Kuang D, 2020, Journal of Civil Aviation Flight College of China, 31(03):77-80.

[6] Xu J, 2019, Research on the Development of Mechanical Design Automation and Its Application in Aerospace Field -- Comment on "Multi-objective and Multi-disciplinary Design Optimization Method for Aero Turbofan Engine." Mechanical Design, 38(02):151.

[7] 2020, Aviation Industry/AVIC Failure Analysis Center of COMAC Mechanical Failure Analysis Center. Failure Analysis and Prevention, 15(06):5.

Journal of Electronic Research and Application, 2021, Volume 5, Issue 3
http://ojs.bbwpublisher.com/index.php/JERA
ISSN Online: 2208-3510
ISSN Print: 2208-3502

Research on Self-Supervised Comparative Learning for Computer Vision

Yuanyuan Liu[1]*, Qianqian Liu[2]

[1]Heilongjiang University of Science and Technology, Harbin 150000, Heilongjiang Province, China

[2]Shengli Oilfield Central Hospital, Dongying 257000, Shandong Province, China

Corresponding author: Yuanyuan Liu, lyyziyi@163.com

Abstract: In recent years, self-supervised learning which does not require a large number of manual labels generate supervised signals through the data itself to attain the characterization learning of samples. Self-supervised learning solves the problem of learning semantic features from unlabeled data, and realizes pre-training of models in large data sets. Its significant advantages have been extensively studied by scholars in recent years. There are usually three types of self-supervised learning: "Generative, Contrastive, and Generative-Contrastive." The model of the comparative learning method is relatively simple, and the performance of the current downstream task is comparable to that of the supervised learning method. Therefore, we propose a conceptual analysis framework: data augmentation pipeline, architectures, pretext tasks, comparison methods, semi-supervised fine-tuning. Based on this conceptual framework, we qualitatively analyze the existing comparative self-supervised learning methods for computer vision, and then further analyze its performance at different stages, and finally summarize the research status of self-supervised comparative learning methods in other fields.

Keywords: Self-supervised learning; Comparative learning; Conceptual analysis framework; Computer vision field; Performance analysis

Publication date: May 2021; ***Online publication:*** May 31, 2021

1. Introduction

Deep neural networks have the ability to learn rich patterns from a large number of data, and are widely used in most computer vision supervision tasks, such as image classification [1-3], semantic segmentation [4-5], natural language Processing [6-8], graph learning [9-11], etc. However, supervised learning relies on millions of labeled data samples and is vulnerable to generalization errors, false associations, and adversarial attacks. Self-supervised learning has received widespread attention due to its data efficiency and generalization ability, and many advanced models are following this paradigm.

Self-supervised learning does not involve manual labeling. It uses an excuse task to mine the supervised signals of the data from large-scale unlabeled data, and applies the learned representation information to downstream tasks. It belongs to a branch of the field of unsupervised learning. At present, self-supervised learning methods are mainly divided into three types: "Generative, Contrastive, and Generative-Contrastive." The details are shown in **Figure 1.** Their main difference lies in the discriminator, potential distribution z, loss function and so on.

For computer vision, the comparative self-supervised learning method is a distinguishing method, which realizes the learning of unlabeled data by grouping similar samples closer together and different samples grouping further away. Comparative self-supervised learning has a simple structure, and its performance is comparable to supervised learning. Therefore, we collect the self-supervised comparative learning methods of visual representation in recent years, and analyze the current methods in detail based

on the conceptual analysis framework we proposed. In short, the main contribution of this article is：

(1) Propose a conceptual analysis framework for the CSL method, realize the hierarchical analysis of the existing technology, and intuitively understand the difference of the CSL method.

(2) Provide a detailed and up-to-date review of self-supervised comparative learning methods for computer vision. People can easily grasp the cutting-edge ideas in this direction.

(3) On this basis, we analyze the comparative analysis of the quantitative performance of the existing technology in the public data set.

(4) Discuss the current self-supervised comparative learning methods for natural language processing and multi-modal learning related technologies, discuss and analyze future development directions, etc.

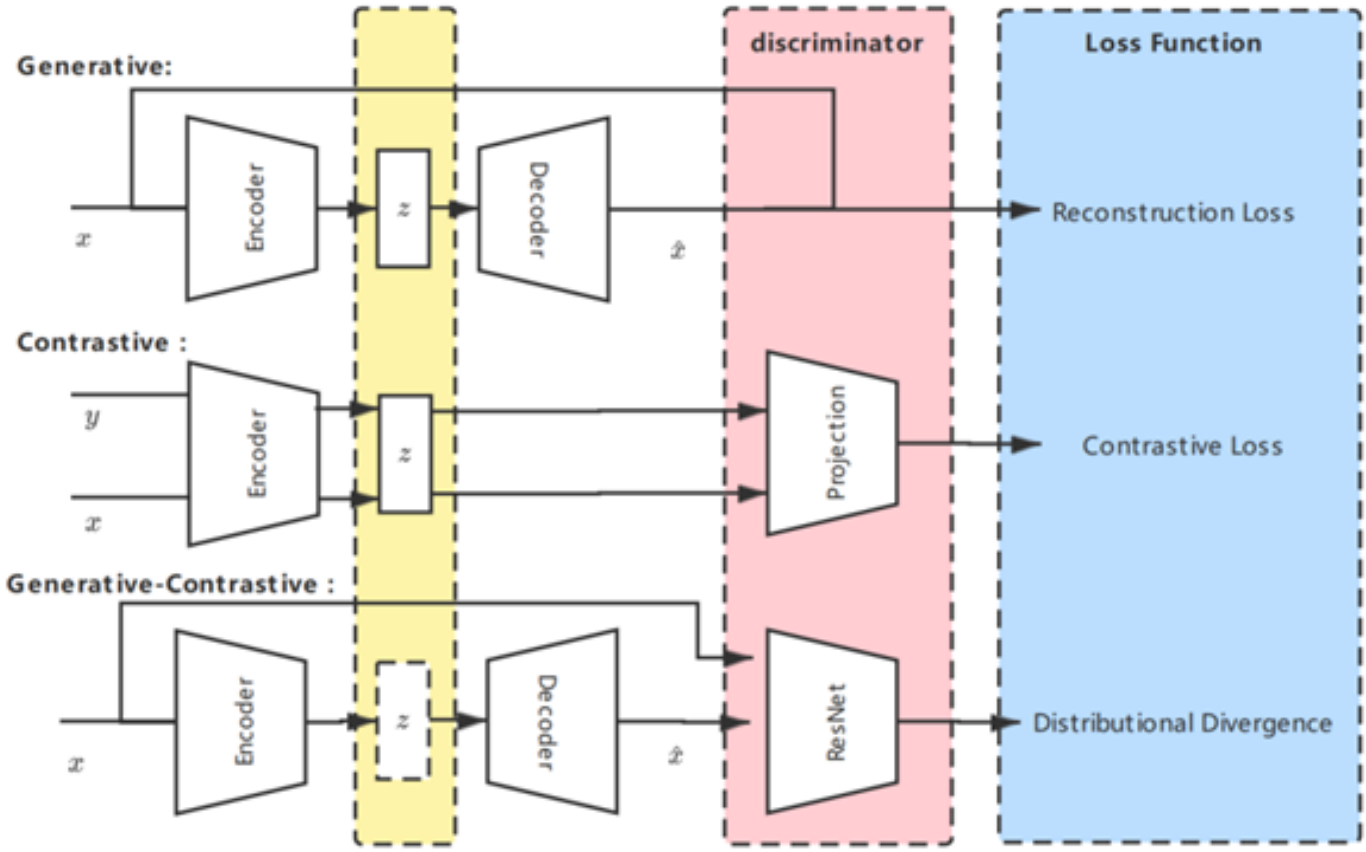

Figure 1. Architecture comparison of Generative, Contrastive, and Generative-Contrastive

2. Contrastive self-supervised learning methods

At present, the comparison of self-supervised learning pipelines is usually shown in **Figure 2.** The augmentation processing of the original sample is a positive sample, while the remaining samples in the batch and data set are considered as negative samples, and the difference learning between positive and negative samples is learned by solving the pretext task. In the process of the pretext task, the model learns the representations in the training set, and then transfers to other downstream tasks after fine-tuning.

This paper is based on the process of comparative learning method and the research of comparative self-supervised learning methods in recent years, as shown in **Table 1.** At the same time, in order to facilitate the qualitative analysis of the differences between different methods, a new conceptual analysis framework is proposed, including five parts: Data augmentation pipeline, architectures, pretext tasks,

comparison methods, semi-supervised fine-tuning.

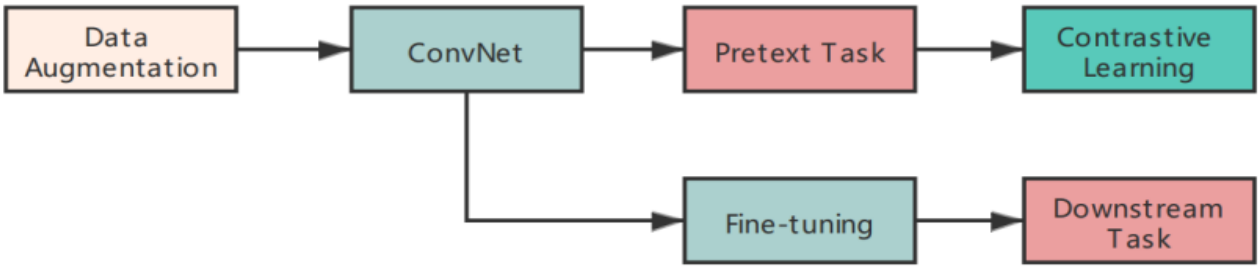

Figure 2. Pipeline based on contrasting self-supervised learning methods

Table 1. Comparison of existing methods.

Method	Architectures	Pretext tasks	Comparison	NS	PS
RelativePosition [19]	-	Relative postion prediction	Spatial relations (Context-Instance)	-	-
CDJR [20]	End-to-end	Jigsaw + Inpainting + Colorization		×	×
PIRL [21]	Memory bank	Jigsaw		×	√
RotNet [22]	-	Rotation Prediction		-	-
Deep InfoMax [23]	End-to-end	MI Maximization	Belonging (Context-Instance)	×	×
AMDIM [24]	End-to-end			×	√
CPC [25]	End-to-end			×	×
DeepCluster [26]	-	Cluster discrimination	Similarity (Instance-Instance)	-	-
Local Aggregation [27]	-			-	-
ClusterFit [28]	-			-	-
SwAV [29]	Clustering			-	√
SEER [30]	End-to-end			-	√
InstDisc [31]	Memory bank	Instance discrimination	Identity (Instance-Instance)	×	×
CMC [32]	End-to-end			×	√
MoCo [16]	Momentum			×	×
MoCo v2 [33]	Momentum			×	√
SimCLR [17]	End-to-end			×	√
InfoMin [34]	End-to-end			×	√
BYOL [35]	End-to-end			no	√
ReLIC [36]	End-to-end			×	√
SimSiam [37]	End-to-end			no	√

Note: For symbols in "NS" and "PS": "-" means not applicable, "×" means not adopted, " √ " means adopted; "no" particularly means not using negative samples in instance-instance contrast.

2.1. Data augmentation pipeline

The purpose of the data augmentation pipeline is to generate anchor points, positive and negative samples, which maintain the same underlying features as the original samples. In the field of computer vision, there are two common data augmentation methods, one is the data augmentation of image processing technology, and the second is the data augmentation algorithm based on deep learning. SimCLR [17] demonstrated the positive impact of correct data augmentation pipeline on performance.

The augmentation pipeline in AMDIM [24] uses random flipping, image jitter, normalization of mean and standard deviation, etc. The augmentation pipeline is randomly applied twice to generate positive samples, and applied once to negative samples. The author of InfoMin [34] first proposed an unsupervised method of minimizing the mutual information between views to increase the number of positive samples, and combing with a semi-supervised method to find views that only share label information to prevent the loss of predicted label information. This method is about 2% higher than MoCov2. BYOL [35] only uses positive examples, using a random image augmentation channel similar to SimCRL.

2.2. Architecture

The contrastive learning method relies on the calculation of the similarity of negative samples, which can be regarded as a dictionary lookup process. The size of the dictionary is different for different architecture, and it is usually divided into four structures: end-to-end, memory bank, momentum encoder, and clustering. As shown in **Figure 3.**

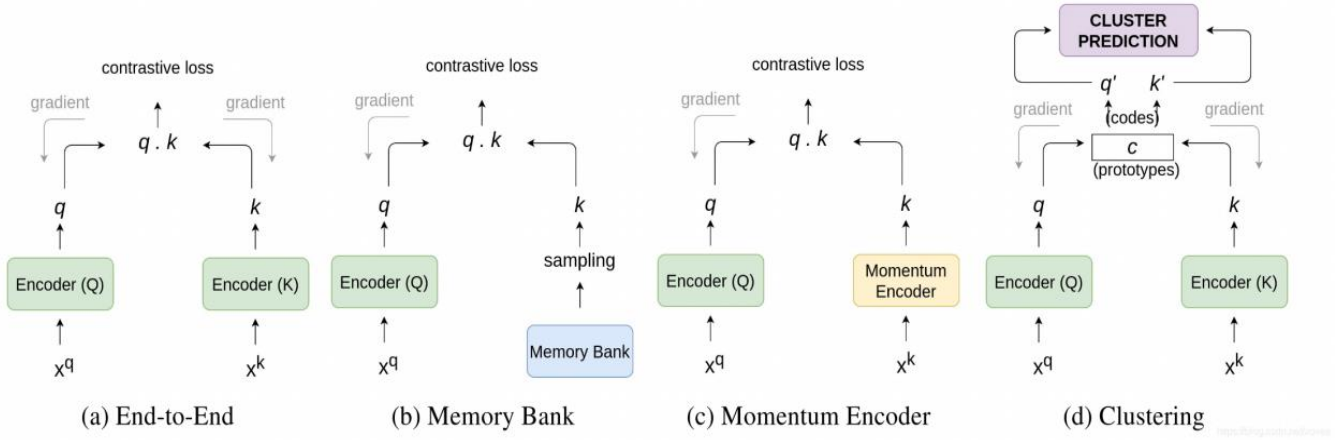

Figure 3. Different architecture in contrastive learning method

The end-to-end is a complex learning system that uses gradient learning, and all modules are differentiable. The original image and its augmentation image are positive samples, and other samples in the same batch are negative samples. Its structure is simple, suitable for large-scale, large-epoch use. The number of negative samples is related to the batch size. However, the batch size is limited by GPU memory, [15] pointed out this structure needs to be optimized in small batches.

SimCLR [17] uses 4096 batches to process 100 epochs. The structure is shown in **Figure 4.**, including image augmentation pipeline, encoder, projection, similarity calculation, and InfoNCE loss function. It adopts the two-mapping structure of encoder and projection, the upper and lower branches are symmetrical, and the two can share parameters. Oord et al. [25] proposed another popular end-to-end architecture. They used a powerful autoregressive model and contrast loss to predict the future of the latent space and learned the feature representation of high-dimensional time series data [20,23,24,30,32,34-37].

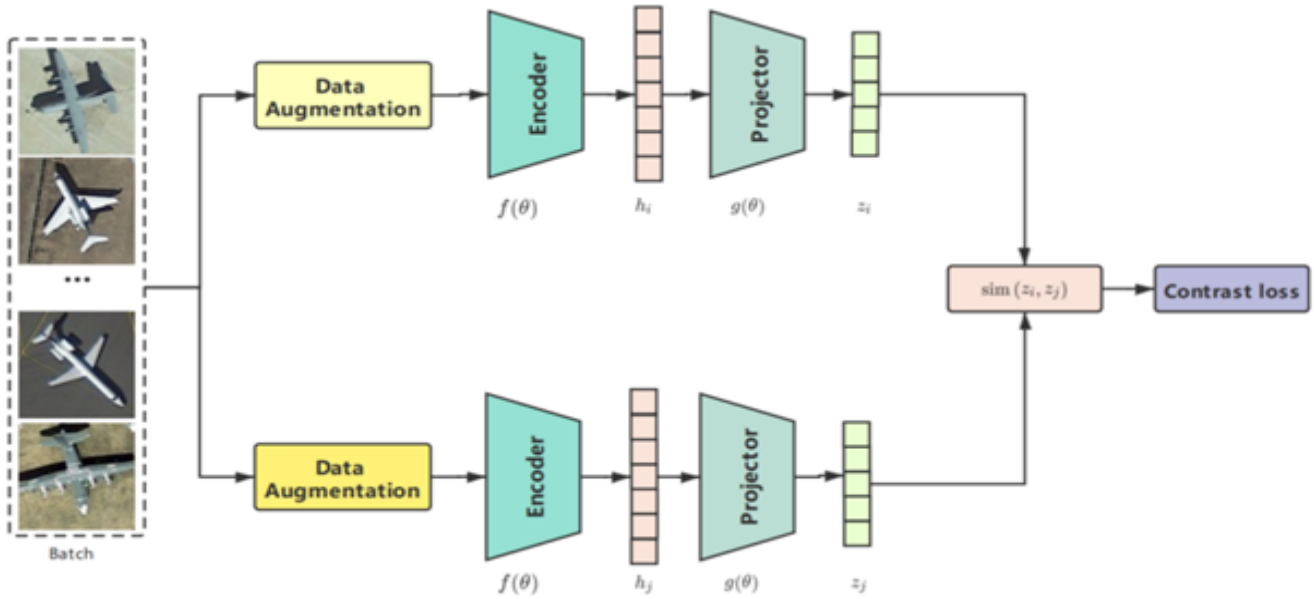

Figure 4. End-to-end in SimCLR

It was proposed to use the repository to save all the features of the image and provide negative samples during training [21]. This structure solves the problem of excessive batch processing, but it consumes a lot of memory, its updates are slow and the complexity of update calculations is high.

The structure of PIRL [21] is shown in **Figure 5.** The storage library M contains the feature representation of each sample, which is convenient to provide sufficient negative samples and provide an intermediate benchmark between the original image and the changed image, and it is updated in a moving average manner [31].

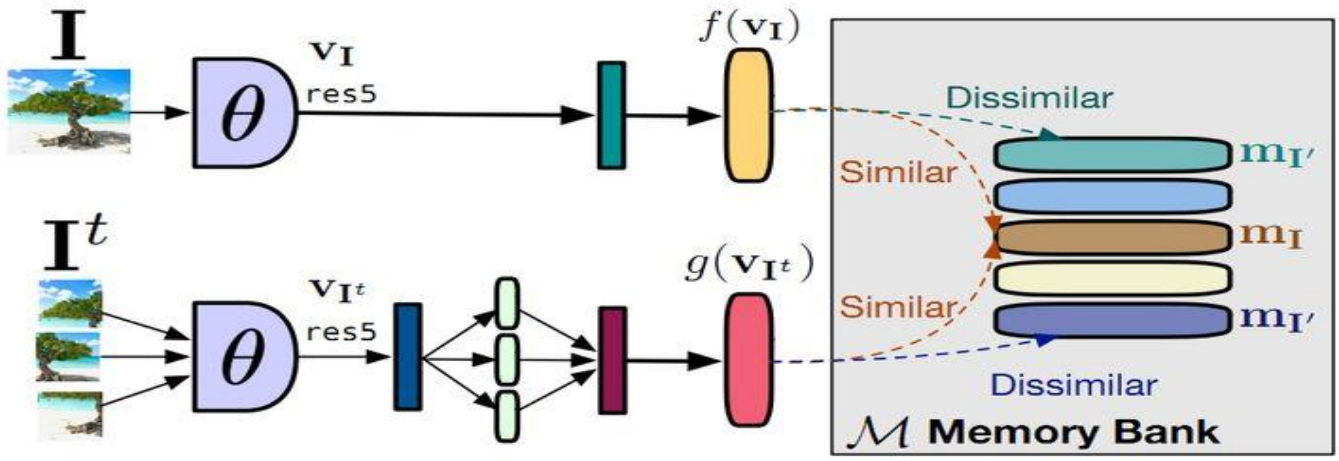

Figure 5. PIRL's memory bank

The momentum encoder generates a dictionary as a queue of encoded keys, and adopts the momentum update method to realize that the dictionary keys are dynamically defined by a batch of data samples during training. This structure further solves the problem of the memory bank.

The structure of MoCo V2 [33] is shown in **Figure 6.**, similar to SimCLR. The parameters of the upper branch model of MoCo V2 are updated by backpropagation gradient, and the parameters of the lower branch

model is updated using **Formula 1.**, and the upper and lower branches do not share parameters.

Formula 1. $$\xi = m\,\xi + (1 - m)\,\vartheta$$

Among them, ϑ are the model parameters of the upper branch structure, ξ are the parameters of the lower branch structure model, m and are the adjustment parameters of the weight. Usually m will take a larger value. Compared with the upper branch parameter, the lower branch parameter changes slowly and steadily, and iterates from the random value to the optimal value bit by bit [16].

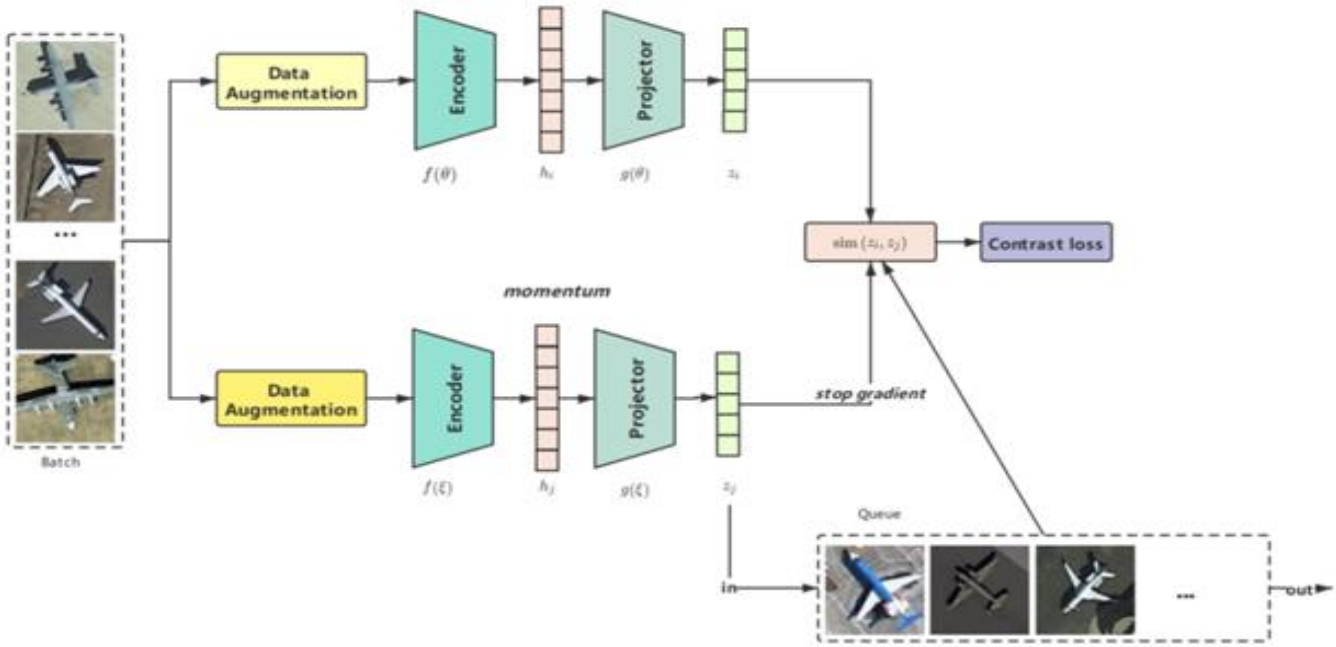

Figure 6. Momentum encoder used by MoCo

The clustering follows an end-to-end approach, where two encoders share parameters and use a clustering algorithm to group similar features together. This structure implicitly solves the problem that in the Instance-based learning method, the comparison of different samples of the same class within the same batch cannot be achieved. The typical method SWAV of this structure, its structure is shown as in **Figure 7.**

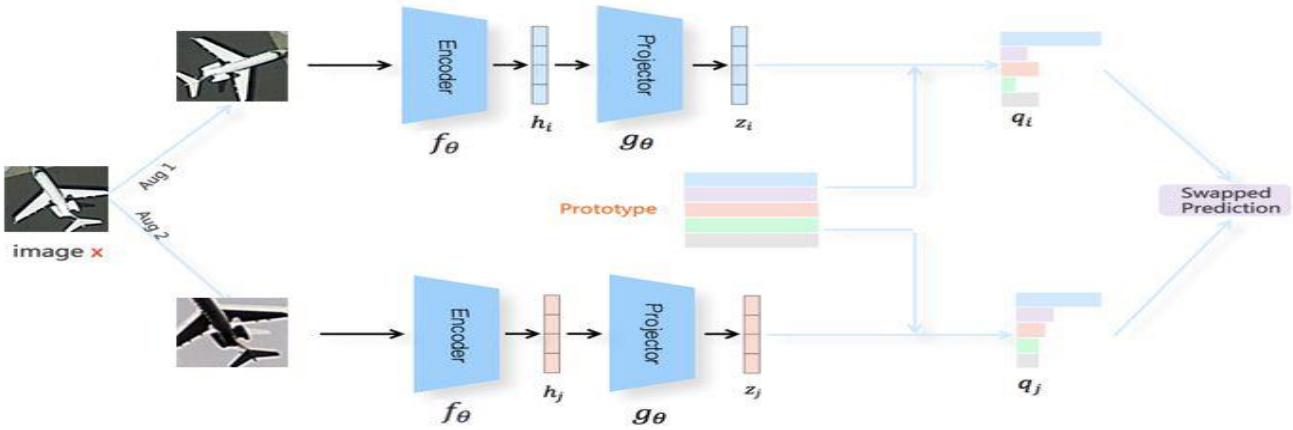

Figure 7. Clustering used by SWAV

2.3. Pretext tasks

The pretext tasks a self-supervised task, which automatically generates pseudo-labels based on the attributes found in the data to achieve characterization learning. Commonly used pretext tasks are mainly divided into four categories: color transformation, geometric transformation, context-based and view prediction (cross modal-based). Currently, cross modal-based commonly used the learning of video representations. Research has shown that it is necessary to choose the appropriate pretext tasks according to the problem to be solved. At the same time, different pretext tasks also affect the way of subsequent characterization extraction and comparison.

Color transformation involves the basic adjustment of image color levels, such as blur, color distortion, grayscale conversion and so on. Geometric transformation is a spatial transformation that modifies the geometric shape of an image without changing its actual pixel information, such as zooming, random cropping, flipping etc. The purpose of those transformation used as pretext tasks is usually to restore, such as relative position prediction, rotation prediction and so on. RotNet [22] is the prediction of the rotation angle based on the transformation of rotation.

For computer vision, context-based often include puzzles, future predictions and so on. PIRL [21] uses puzzle as a pretext task, the original image is the anchor point, the image after the position transformation is the positive sample, and other images in the batch are considered as negative samples [21]. CPC [25] research shows that high-dimensional data is compressed into a compact low-dimensional potential embedding space. A powerful autoregressive model can summarize the information of the potential space and generate a potential context representation. Based on the distributed vector of its composition, the maximum Ground retains the mutual information of the original signal.

2.4. Comparison method

2.4.1. Characterization extraction method

At present, the comparative learning framework is divided into context-Instance comparison and Instance-Instance comparison. Context-instance comparison focuses on the attribution relationship between the local features of the modeling sample and the global context. The Instance-Instance comparison directly studies the relationship between instance-level local representations of different samples.

Context-instance comparison methods can usually be divided into two types: comparison based on spatial relations and comparison based on belonging. Three typical spatial relationship comparison methods: predict relative position [19], rotate [22] and solve puzzles [20,21,48]. The comparison method based on the attribution relationship focuses on the relationship between the local view and the global view of the sample, and solves it with the help of mutual information. Deep InfoMax [23] is the first method to explicitly model mutual information through comparative learning tasks, which promotes the development of self-supervised learning. AMDIM [24] enhances the positive correlation between a local feature and its context. The comparison Instance-Instance method mainly includes two categories: comparison method by clustering and comparison method by identity [26,49-51].

DeepCluster [26] first uses clustering to generate pseudo-labels. The training process is mainly two steps. The first is to cluster through clustering algorithms. Class, each sample generates a pseudo-label, the second is that the discriminator predicts whether two samples are from the same cluster and backpropagates to the encoder. SwAV [29] introduced online clustering ideas and multi-view data augmentation strategies into clustering discrimination methods. The prototype is InstDisc [31] with the comparison method by identity. Later, the research of this method focuses on the selection of positive and negative samples. Based on InstDisc, CMC [32] proposed to take multiple different views of one image as positive samples, and the other image as negative samples. MoCo [16] proposed a way through momentum encoder. SimCLR [17] proposes to add a nonlinear Projection transformation between representation and comparison to achieve the

extraction of lower-level information. InfoMin [34] chooses views with less mutual information to achieve better enhanced views and achieve an increase in positive samples. BYOL [35] abandons negative samples and proposes a new architecture that uses an exponential moving average strategy to update the target encoder.

2.4.2. Similarity measure and loss function

The measure of similarity is to measure the closeness of the embedding between two samples. The commonly used similarity measure is the cosine similarity (as shown in **Formula 2.**), which serves as the basis for different contrast loss functions.

Formula 2.

$$\text{COS_}sim(A,B)=\frac{AB}{||\text{A}||||B||}$$

The loss function uses contrast positive-negative samples to express learning ability, and is defined as a combination of positive and negative scores that reflect learning progress. Commonly used loss functions are NCE [18], InfoNCE [52], triplet loss [32].

2.5. Semi-supervised fine-tuning processing

Improve the self-supervised learning model and improve the ability to extract data representations, but in order to transfer to downstream tasks, we need more or less tags. In order to narrow the gap between self-supervised upstream tasks and downstream tasks, semi-supervised learning is usually used.

Analysis based on the contrast self-supervised learning method is beneficial in many downstream vision tasks, but it cannot improve the target detection task in COCO [12]. Studies have found that the improvement of pre-training and self-training contributes to performance from different perspectives [13]. It is found that ResNet-50 uses 10% of the ImageNet label, which can surpass the supervised label of joint pre-training and self-training [14]. Therefore, for self-supervised comparative learning, a three-step framework is proposed:

(1) Do self-supervised pre-training as SimCLR v1, with some minor architecture modification and a deeper ResNet.

(2) Fine-tune the last few layers with only 1% or 10% of original ImageNet labels.

(3) Use the fine-tuned network as teacher to yield labels on unlabeled data to train a smaller student ResNet-50.

The success in combining self-supervised contrastive pre-training and semi-supervised self-training opens up our eyes for a future data-efficient deep learning paradigm. More work is expected for investigating their latent mechanisms.

3. Image representation learning performance analysis

In order to evaluate and compare the performance of self-supervised learning, it is usually analyzed from two aspects: the effectiveness of the pretext task and the specific performance of the downstream task.

Assessing the effectiveness of the pretext task is usually analyzed by kernel visualization, feature map, and nearest neighbor-based methods. For example, attention maps generated from different layers of the encoder can be used to evaluate whether the excuse task is effective, as shown in **Figure 8.**

In the downstream task, image classification, most methods use two commonly data sets of ImageNet and Places to evaluation. In terms of target detection, the Pascal VOC data set is often used to evaluation. The performance of these methods is better than the best supervised models.

As shown in **Table 2.**, without considering the proportion of batch size, epoch and the number of semi-supervised fine-tuning labels, the current method's classification performance on ImageNet and the

performance of target detection on Pascal VOC are roughly counted. At present, the top-1 classification accuracy on the ImageNet dataset based on the comparative self-supervised learning method is comparable to the supervised classification accuracy, and the current top-1 accuracy is stable at 65% on the basic ResNet structure. At the same time, there is a small gap between performance and supervised learning in target detection tasks, and the average detection accuracy is above 80%. However, whether it is in classification tasks or target detection tasks, the gap between comparative learning methods and supervised learning methods is based on a deeper and wider network structure and training with a large number of samples.

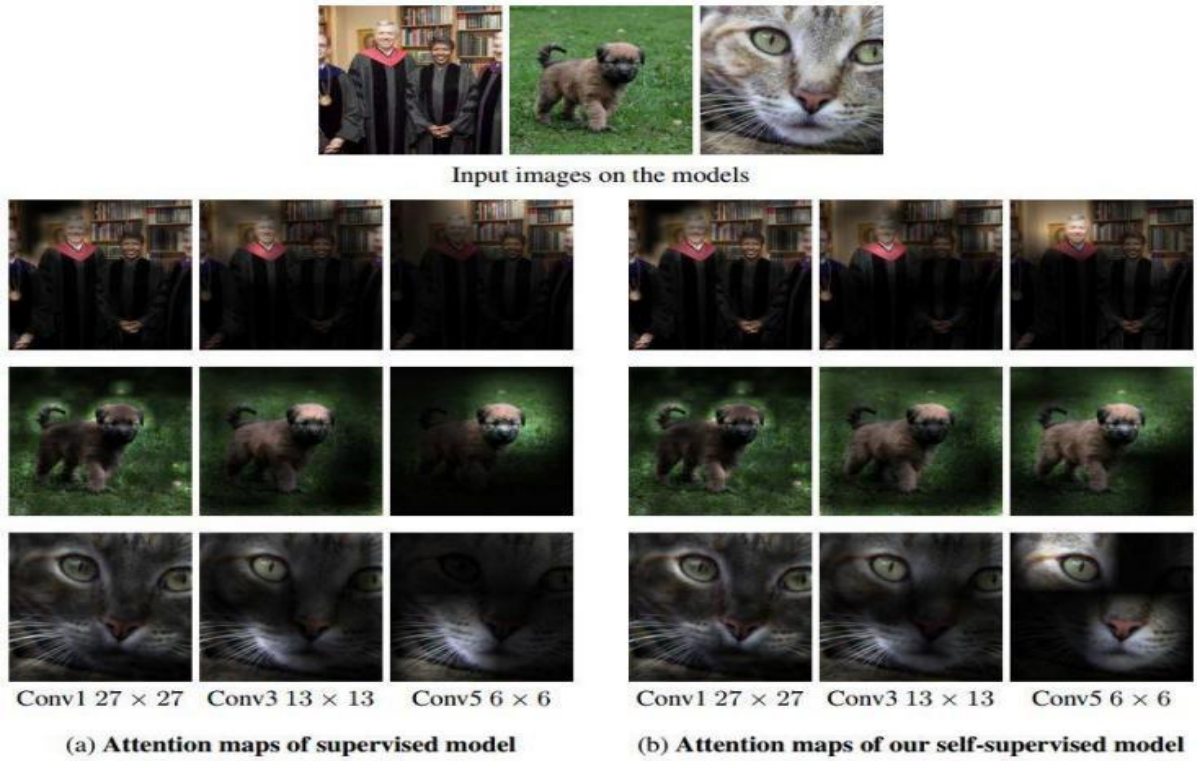

Figure 8. Attention map applied on Conv1 27x27, Conv3 13x13 and Conv5 6x6 features

Table 2. (1) The linear classification accuracy based on frozen features is the highest (top-1); (2) VOC7+12 features based on Faster-CNN fine-tuned target detection

Method	Encoder	Parameter	Top-1	Detection
Supervised	ResNet50	25.6M	53.2	81.3
DeepCluster	AlexNet	61M	37.5	55.4
PIRL	ResNet50	25.6M	49.8	80.7
MoCo	ResNet50	25.6M	60.6	81.4
MoCo V2	ResNet50	25.6M	67.5	-
SwAv	ResNet50	25.6M	56.7	82.6
CPC v2	ResNet50	25.6M	63.8	
CPC v2	ResNet161	305M	71.5	-
SimCLR	ResNet50	25.6M	65.6	84.1
SimCLR	ResNet50(2*)	94M	74.2	-
SimCLR	ResNet50(4*)	375M	76.5	-
BYOL	ResNet50	25.6M	68.8	85.4
BYOL	ResNet200(2*)	250M	77.7	-
SimSiam	ResNet50	25.6M	74.3	82.4

4. Contrastive learning in other areas of research

At present, comparative learning is widely studied in the fields of natural language processing, multi-modality, graph neural network and other fields. And different fields influence each other.

Comparative learning was first introduced into natural language processing, using co-occurring words as semantic similarities, and using negative sampling to learn word embedding [38]. Learn useful feature representations from unlabeled data, and introduce latent classes to formalize semantically similar concepts. This method is comparable to state-of-the-art supervision methods on the Wiki-3029 dataset [39]. Researchers discuss the coherence and encodes the fine-grained sentence ordering in the text [40]. Although it has the same number of parameters as BERT-Base, it is better than the BERT-Large model. At the same time, it shows significant improvement on multiple downstream tasks [41-43].

Contrastive learning in the multi-modal field relies on the alignment of different modal information, and is basically supervised comparative learning. CM-ACC [44] learns the joint representation of audio and vision in video data, similar to MOCO, with an encoder and momentum encoder for each of the audio and visual modalities.CM-ACC adopts a method of dynamically constructing a queue to ensure the amount of information and diversity of negative cases. CLIP [45] and ALIGN [46] focus on text and visual modalities, and adopt a comparative learning mode in which there is only one encoder for each modal, and negative examples are selected in the batch. There is also WenLan [47].

5. Conclusion

This article reviews the development status of comparative learning methods in self-supervised learning for computer vision. The comparative model is lightweight and uses unlabeled data to self-learn to generate supervised signals. At present, the performance on the basic data set is comparable to supervised learning. However, there are still many problems to be solved. For example, based on the problem of sampling efficiency, the theory of the role of negative samples in the method is not clear. SimCLR proves that data augmentation can improve the performance of the method, but the reasons and theories are not yet demonstrated. Evaluation of migration capability based on other data sets, etc.

Disclosure statement

The author declares no conflict of interest.

References

[1] Deng J, Dong W, Socher R, et al., 2009, Imagenet: A Large-Scale Hierarchical Image Database. In CVPR:248–255.IEEE.

[2] He K, Zhang X, et al., 2016, Deep Residual Learning for Image Recognition. In CVPR: 770–778.

[3] Huang G, et al., 2017, Weinberger. Densely Connected Convolutional Networks. 2017 IEEE CVPR: 2261–2269.

[4] Girshick R, et al., 2014, Rich Feature Hier-Archies for Accurate Object Detection and Semantic Segmentation. In CVPR: 580–587.

[5] Long J, et al., 2015, Fully Convolutional Networks for Semantic Segmentation. In CVPR: 3431–3440.

[6] Devlin J, et al., 2015, Pre-Training of Deep Bidirectional Transformers for Language Under-Standing. In Proceedings of the 2019 Conference of the North American Chapter of the Association for Computational Linguistics: Human Language Technologies, (1):4171–4186.

[7] Lan Z, et al., 2019, Albert: A Lite Bert for Self-Supervised Learning of Language Representations. arXiv preprint arXiv:1909.11942.

[8] Asai A, et al., 2019, Learning to Retrieve Reasoning Paths Over Wikipedia Graph for Question Answering. arXiv preprint arXiv:1911.10470.

[9] Hu Z, et al., 2020, Heterogeneous Graph Transformer. arXiv preprint arXiv:2003.01332.

[10] Zhang M, et al., 2018, An End-To-End Deep Learning Architecture for Graph Classification. In AAAI.

[11] Hoffmann J, et al., 2019, Infograph: Unsupervised and Semi-Supervised Graph-Level Representation Learning Via Mutual Information Maximization. arXiv preprint arXiv:1908.01000.

[12] Deng J, 2020, How Useful is Self-Supervised Pretraining for Visual Tasks? In CVPR: 7345–7354.

[13] Zoph B, et al., 2020, Rethinking Pre-Training and Self-Training. arXiv:2006.06882.

[14] Chen T, et al., 2020, Big Self-Supervised Models are Strong Semi-Supervised Learners. arXiv preprint arXiv:2006.10029.

[15] Goyal P, et al., 2017, Accurate, Large Minibatch Sgd: Training Imagenet in 1 Hour.

[16] He K, et al., 2019, Momentum Contrast for Unsupervised Visual Representation Learning.

[17] T. Chen, et al., 2020, A Simple Framework for Contrastive Learning of Visual Representations. arXiv preprint arXiv:2002.05709.

[18] Gutmann M, Hyvärinen A, 2010, Noise-Contrastive Estimation: A New Estimation Principle for Unnormalized Statistical Models. In AISTATS.

[19] Doersch C, Gupta A, et al., 2015, Unsupervised Visual Representation Learning by Context Prediction. In Proceedings of the IEEE ICCV: 1422–1430.

[20] Kim D, et al., 2018, Learning Image Representations by Completing Damaged Jigsaw Puzzles. In 2018 IEEE Winter Conference on Applications of Computer Vision (WACV): 793–802.

[21] Misra I, et al., 2019, Self-Supervised Learning of Pretext-Invariant Representations. arXiv preprint arXiv:1912.01991.

[22] Gidaris S, Singh P, et al., 2018, Unsupervised Repre-Sentation Learning by Predicting Image Rotations. arXiv preprint arXiv:1803.07728.

[23] Hjelm R, et al., 2018, Learning Deep Representations by Mutual Information Estimation and Maximization. arXiv preprint arXiv:1808.06670.

[24] Bachman P, Hjelm R, 2019, Learning Represen-Ations by Maximizing Mutual Information Across Views. In NIPS: 15509–15519.

[25] Li Y, Vinyals O, 2018, Representation Learning with Contrastive Predictive Coding. arXiv:1807.03748.

[26] Caron M, et al., 2018, Deep Clustering for Unsupervised Learning of Visual Features. In Proceedings of the ECCV (ECCV): 132–149.

[27] Zhuang C, et al., 2019, Local Aggregation for Unsupervised Learning of Visual Embeddings. In Proceedings of the IEEE ICCV: 6002–6012.

[28] Yan X, Misra I, et al., 2019, Clusterfit: Improving Generalization of Visual Representations. arXiv:1912.03330.

[29] Caron M, Misra I, et al., 2020, Unsupervised Learning of Visual Features by Contrasting Cluster Assignments. arXiv preprint arXiv:2006.09882, 2020.

[30] Goyal JP, Caron M, et al., 2021, Self-Supervised Pretraining of Visual Features in the Wild. arXiv preprint arXiv:2103.01988.

[31] Wu Z, Xiong Y, et al., 2018, Unsupervised Feature Learning Via Non-Parametric Instance Discrimination. In CVPR: 3733–3742, 2018.

[32] Tian Y, Krishnan D, et al., 2019, Contrastive Multiview Coding. arXiv preprint arXiv:1906.05849.

[33] X. Chen, H. Fan, et al., 2020, Improved Baselines with Momentum Contrastive Learning. arXiv preprint arXiv:2003.04297.

[34] Tian Y, Sun C, et al., 2005, What Makes for Good Views for Contrastive Learning. arXiv preprint arXiv:2005.10243.

[35] Grill JB, Strub F, et al., 2006, Bootstrap your Own Latent: A New Approach to Self-Supervised Learning. arXiv preprint arXiv:2006.07733.

[36] J. Mitrovic, B. McWilliams, et al., 2010, Representation Learning Via Invariant Causal Mechanisms. arXiv preprint arXiv:2010.07922.

[37] Chen X, et al., 2011, Exploring Simple Siamese Representation Learning. arXiv:2011.10566.

[38] Mikolov T, Sutskever I, et al., 2013, Distributed Representations of Words and Phrases and Their Compositionality.

[39] Arora S, Khandeparkar H, et al., 2019, A Theoretical Analysis of Contrastive Unsupervised Representation Learning.

[40] Iter D, Guu K, et al., 2020, Pretraining with Contrastive Sentence Objectives Improves Discourse Performance of Language Models.

[41] Chi Z, Dong L, Wei F, et al., 2020, Infoxlm: An Information-Theoretic Framework for Cross-Lingual Language Model Pre-Training.

[42] Fang H, Wang S, Zhou M, et al., 2020, Cert: Contrastive Self-Supervised Learning for Language Understanding.

[43] Giorgi J, Nitski O, Bader G, et al., 2020, Declutr: Deep Contrastive Learning for Unsupervised Textual Representations.

[44] Ma, Shuang, et al., 2021, "Active Contrastive Learning of Audio-Visual Video Representations." ICLR 2021: The Ninth International Conference on Learning Representations.

[45] Radford, Alec, et al., 2021, "Learning Transferable Visual Models from Natural Language Supervision." ArXiv Preprint ArXiv:2103.00020.

[46] Jia, Chao, et al., 2021, "Scaling Up Visual and Vision-Language Representation Learning with Noisy Text Supervision." ArXiv Preprint ArXiv:2102.05918.

[47] Huo Y, et al., 2021, "WenLan: Bridging Vision and Language by Large-Scale Multi-Modal Pre-Training." ArXiv Preprint ArXiv:2103.06561.

[48] Wei C, Xie L, Ren X, et al., 2019, Iterative Reorganization with Weak Spatial Constraints: Solving Arbitrary Jigsaw Puzzles for Unsupervised Representation Learning. In CVPR: 1910–1919.

[49] Li, W. Hung J, Huang S, et al., 2016, Unsupervised Visual Representation Learning by Graph-Based Consistent Constraints. In ECCV: 678–694. Springer.

[50] Noroozi M, Vinjimoor A, Favaro P, et al., 2018, Boosting Self-Supervised Learning Via Knowledge Transfer. In CVPR: 9359–9367.

[51] Yang J, Parikh D, Batra D, 2016, Joint Unsupervised Learning of Deep Representations and Image Clusters. In CVPR: 5147–5156.

[52] Olivier J, Hénaff, Razavi A, Doersch C, et al., 2019, Data-Efficient Image Recognition with Contrastive Predictive Coding. arXiv preprint arXiv:1905.09272.

Journal of Electronic Research and Application, 2021, Volume 5, Issue 3
http://ojs.bbwpublisher.com/index.php/JERA
ISSN Online: 2208-3510
ISSN Print: 2208-3502

Innovation Ultrasonic Assistant Soldering in Electronics

Vladimir Lanin*

Department of Electronic Technique and Technology, University of Informatics and Radioelectronics, Minsk, Belarus

***Corresponding author:** Vladimir L. Lanin, vlanin@bsuir.by

Abstract: Innovative approaches in ultrasonic assistant soldering consists of increasing the activity of cavitation and accelerating diffusion processes at the interface between the solder and the soldering material. Besides that, it improves the effectiveness of cavitation processes in melts by saturating gas cavities with diameters that are smaller than the resonant sizes of cavitation germs. Gas saturation of liquids and melts raises level of cavitation pressure by 20-25%, that intensifies US processing of cleaning, soldering and metallization. Modelling diffusion process showed that the US activation increased the concentration of diffusing elements of Zn and Al in the interface depth by 15–20% on average, and the combined activation by the US and electric field increased it by 30–45%. Furthermore, as the energy quantity adsorbed by melt increases, increased amplitude and frequency of US vibrations induces concentration rise. The heat energy was also boosted by combining the activation of the melt–soldered material system with US vibrations energy and high current pulses. This allows for a faster increase in soldering temperature, as well as improved solder wettability.

Keywords: Ultrasonic; Cavitation; Gas cavities; Electric field; Melts

Publication date: May 2021; ***Online publication:*** May 31, 2021

1. Introduction

The effects of intense ultrasound on liquid media include acoustic cavitation, which causes pulsations and the collapse of cavitation bubbles; ultrasonic capillary effect; sonoluminescence; vortex effects in the form of micro and macro flows; and acceleration of diffusion processes, among others [1]. The greatest number of secondary physical effects is caused by cavitation, according to an analysis of intense ultrasonic impacts in liquid media (**Figure 1.**). Due to conditions created for the formation of chemical bonds between oxides at the interface, local thermal effects arising from the collapse of cavitation bubbles are used in ultrasound metallization of nonmetallic materials such as ceramics, glass ceramics, ferrites, etc. [2] Dynamic effects ensure the removal of grease and oxide films from the surfaces of materials, which is the physical basis for ultrasonic cleaning in liquid media [3] and ultrasonic brazing of hard-to-solder materials [4]. Some primary effects, such as the electrokinetic, wetting, have not yet been widely used in technology due to the limited possibilities of implementation.

It is critical to produce a cavitation area with adjustable erosive activity when ultrasonic (US) processing in liquids and melts is used for pollution removal, metallization of non-metallic materials, and scatter micro- and nano-dimensional powder materials. However, nonuniformity of distribution US pressure and differences in intensity cavitation define US fields in baths with varied numbers of radiators [5].

In liquids the quantity of cavitation germs does not give in to the exact account, as it depends on many factors such as, gas maintenances in a liquid, quantities of firm particles, ambient temperatures, external pressure, etc. Not all cavitation germs participate in cavitation process, but only those from them which

under action US pressure have reached of the critical sizes. The cavitation threshold decreases, if the liquid environment to influence an ionizing radiation or an electric current. Both of these influences are connected with formation of new cavitation germs in the liquids. However, at these methods of activation cavitation process remains non-stationary and difficultly operated [6].

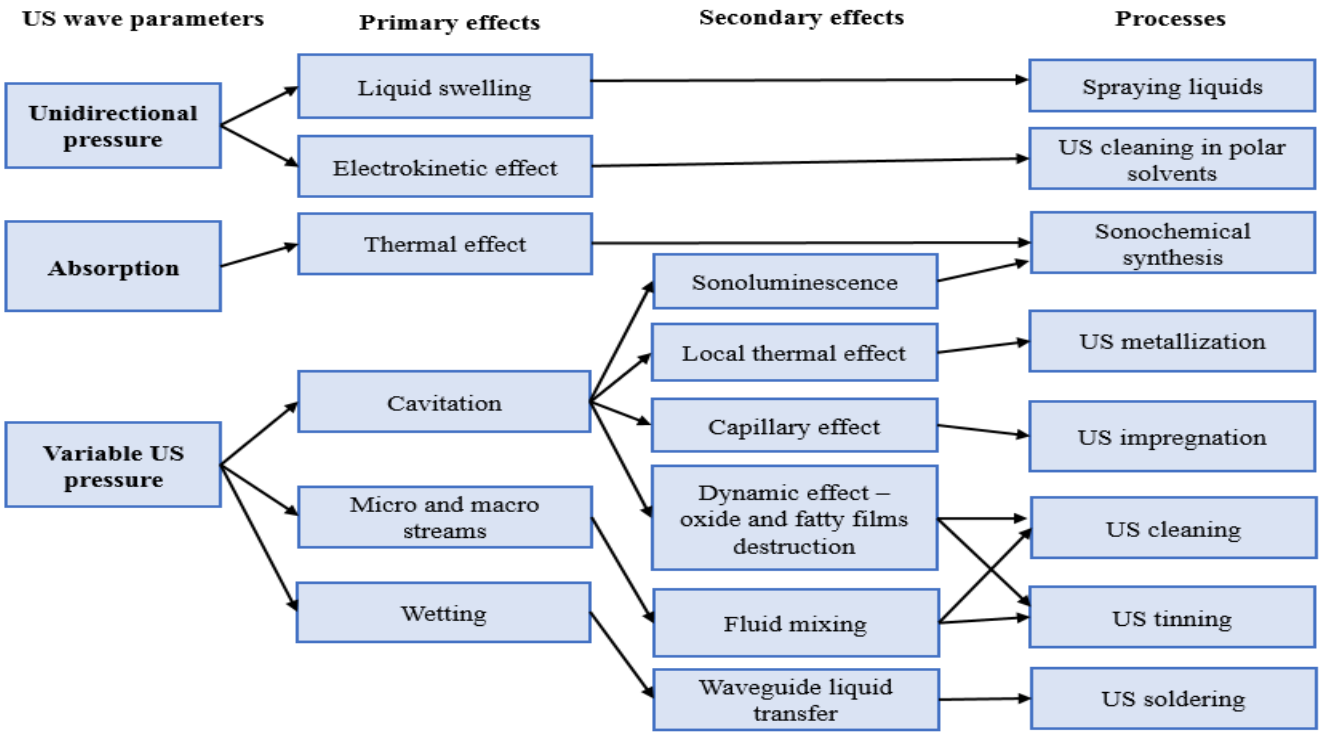

Figure 1. Ultrasound effects in liquid media and their application

Innovative approaches in ultrasonic assistant soldering, consist of increasing the activity of cavitation and accelerating diffusion processes at the interface between the solder and the soldering material. Perspective direction in increase of cavitation processes efficiency is gas saturation of a liquid by cavities, with the sizes not exceeding the resonant sizes of germs, i.e. $(10\text{-}50)\cdot 10^{-6}$ m. Increase in the sizes of cavities will lead their premature collapse, and very small sizes complicate cavitation growth of cavities in US field. Another direction is the introduction into the solder melt of insoluble particles of diffusion-active metals, on which nuclei of cavitation bubbles can form.

The replacement of traditional solders with lead-free alloys which has caused a number of problems in the field of solder metal science. Eutectic alloys of the Sn Ag–Cu (SAC) type are widely used despite the higher cost (3 times higher than cost of solders) due to ease of use and low creep [7]. However, the reliability and mechanical properties of soldered joints very much depend on microstructure of solder, the morphology, and thickness of intermetallic compounds at the interface. The formation of Ag_3Sn and Cu_6Sn_5 intermetallides has main negative effect on fatigue processes and causes cracking at solder – metal interface [8].

In some cases, to obtain high-strength aluminum butt joints with corrosion resistance, ultrasonic soldering was conducted using quasi-melting Sn-Zn hypereutectic alloy. Ultrasonic vibrations were applied at soldering temperatures ranging 220–300°C through Al rods without a solder bath [9]. To improve the wettability of ceramic material with Zn–Al–Mg solder, soldering with the assistance of active ultrasound was employed. The tensile strength of Zn–Al–Mg soldering alloys ranges from 82 to 169 MPa; the highest

strength was observed in the solder with the lowest Mg content [10].

Ultrasonic energy activates the molten solder alloy and causes different structure of soldering joints. Analysis of sample micro sections with copper soldering pads confirm the influence of ultrasound on the structure of solder joints. The highest share strength, have been achieved for solder joints which were prepared by ultrasonic soldering on pads with copper surface finish. It is possible to use this technology for creating the electrode system for solar cells [11].

To modify lead-free solders used to form contacts in electronics, alloying adhesive active additives in the form of antioxidants, such as Ce, Ti, as well as metals that reduce the growth of intermetallic compounds like Ni, Ge, are most promising. So, in BALVER ZINN solder, due to introduction of number of metal additives like Cu–0.6–0.7, Ag–0.05, Ge–0.005–0.007, Ni–0.04–0.06 [12], the mechanical strength is significantly improved, number of inclusions and solder bridges are reduced.

The use of ultrasonic vibrations during modification of solder allows to solve these problems. The main effects of action of cavitation and micro-streams on liquid metals are acceleration of nuclei primary formation, and the initiation of secondary nucleation of crystallization centers due to physical mixing and acceleration of diffusion. Ultrasonic modification of alloys is characterized by such effects as grain refinement, improved structure uniformity, wetting, and mechanical properties of soldered joints [13]. However, to obtain the best properties of soldered joints with lead-free solders in electronics, optimization of parameters of ultrasonic effect on solder melts is necessary.

Interest in flux-free US soldering processes is caused by transition to lead-free solders and environmental problems of soldering in electronics. To form high-quality compounds, methods and devices for local ultrasonic activation of solder melts are used. US soldering is preferable for electronic applications because flux is a corrosive agent and it is necessary to remove flux resides as to ensure adequate service reliability of electronic assemblies [14].

A new approach in melt processing technology involves using a high frequency electromagnetic induction coil to induce ultrasonic pressure waves that cause cavitation in alloy melts. This presents an alternative “contactless” approach to conventional US immersed probe techniques. The method can potentially offer the same benefits of traditional ultrasonic treatment (UST) such as degassing, microstructure refinement and dispersion of particles, but avoids melt contamination due to probe erosion prevalent in immersed sonotrodes. An added benefit is that the induction heating and stirring produced by Lorentz force, enables a larger melt treatment volume [15].

The main objective of this work is to develop methods to improve the efficiency of ultrasonic soldering processes for the mounting of modern electronic devices.

2. Fundamentals

For estimation intensity cavitation processes in liquids use the index of a cavitation defined by the relation of total volume of cavities ΣV_K to volume of a liquid V [16]:

$$\chi = \Sigma V_K / V. \qquad (1)$$

The total volume cavities ΣV_K is equal:

$$\sum V_K = 4/3\pi \cdot N \cdot R^3_{max}, \qquad (2)$$

where N – number cavities, R_{max}– radius of cavities in a stage of the greatest expansion.

Experimental data testify, that cavitation area is, as a rule, in a near zone US radiator, therefore US activated liquids volume it is possible to present as product of the area of radiator S_r on height of cavitation area h. Taking into account these assumptions expression (1) will assume the following kind:

$$\chi = \frac{4\pi \cdot \bar{N} \cdot R_{max}^{3}}{3 S_r h}. \qquad (3)$$

Using the equation of ideal gas condition receive:

$$pV = m_M NRT \qquad (4)$$

where p– gas pressure, V– gas volume, m_M– weight of gas molecules, R–gas constant, T– gas temperature.

Regulating pressure and speed of gas distribution it is possible to operate number of the gas molecules N entered into a near zone of US radiator as potential cavitation germs.

At gas activation to liquid, from the compressor with the help of nozzle submitted air or inert gas argon with pressure to 0,1–0,2 MPa. For uniformity of the size of gas cavities in a liquid on exit of nozzle is established the filter-membrane with cells which were formed by laser radiation with high accuracy and repeatability of the sizes. The nozzle includes two porous filters with the sizes of apertures 2–5 microns. For creation of cavities of the micron sizes it is necessary to satisfy following conditions: pressure of air should not exceed 0,2–0,3 MPa, and the distance between apertures in the filter in comparison with diameter of cavities should be considerable. These conditions in certain degree prevent association of cavities of the micron sizes in the big gas cavities.

The resonant frequency of cavitation cavities collapse depends both on its radius Rp, the surface tension of the melt σ and on density ρ according to Minert's expression:

$$f_p = \frac{1}{2\pi R_p}\sqrt{\frac{3\gamma}{\rho}\left(P_o + \frac{2\sigma}{R_p}\right)} \qquad (5)$$

where γ – isothermal coefficient, Po– external pressure.

The action of the US field energy on the melt increases the diffusion coefficient and activates the nucleation process [17]

$$D' = D_0 e^{-\frac{E-\Delta E}{RT}} \qquad (6)$$

where D_0 is the pre-exponential factor, E is the energy of the diffusion activation, Δ E is the change in the energy of the diffusion activation in the US field, and R is the gas constant.

If the US energy introduced into the melt without taking into account losses activates the diffusion process, then

$$\Delta E = 0.5\, \rho c (A \cdot \omega)^2, \qquad (7)$$

where ρc is acoustic impedance, A – amplitude of fluctuations, ω – circular frequency.

In the US field, the force F acts on the diffusing particles, and, under its action, the substance particles move with the average velocity overcoming the force of medium friction F_f

$$V = \upsilon F - \frac{F_f d}{\eta S_p} \quad (8)$$

where υ is the particle mobility, d – medium layer thickness, η – dynamic viscosity, S_p– particle area. The strength of the ultrasonic field, affecting the particle flow section S:

$$F = \rho c \cdot \omega A \cdot S \quad (9)$$

At the activation in the US field, a flux of particles, which move under the action of the force of US vibrations F, is added to the diffusion flux; then, the entire flux amounts to [18]

$$J = -D' \frac{\partial C}{\partial x} + VC_1 \cos\alpha = -D' \frac{\partial C}{\partial x} + (\upsilon \rho c \omega A S - \frac{F_f d}{\eta S_p}) C_p \cos\alpha \quad (10)$$

where C_p is the concentration of mobile particles, and αβ is the angle between the vector of the force of the US field and the diffusion flux vector. It follows from Equation (10) that activation by the US field energy leads to an increase in the diffusion flux.

3. Experimental

At gas activation of melt submitted on the converter, 1 electric fluctuation by frequency 20-44 kHz and amplitude 50-75 mkm from US generator. In a solder melt immersed US radiator 2 so that a backlash between it and soldered element 5 made 0,25–1,5 mm. Through tube 3 and capillary-porous body 4 in a direction to a soldered surface in a melt of solder 6 entered inert gas – argon (**Figure 2.**). The sizes of capillaries in a porous body are chosen such that the sizes of formed gas cavities did not exceed the resonant sizes of cavitation germs in a melt of Sn-Pb solder, example: 10-50 microns [19].

Quantification the spectral density of cavitation noise it is possible to determine the cavitation intensity in liquid surrounding [20]. The greatest spectral density of cavitation noise is in the frequency band from 10th up to 40th harmonics of the base frequency of the ultrasonic converter at acoustic pressure $2 \cdot 10^5$ Pa (**Figure 3.**) [21]. It is offered to quantification cavitation pressure in liquid media by measure the square of a noise level over the range of the greatest spectral density of a cavitation noise The scheme of a cavitometer (**Figure 4.**) consists of a piezoelectric sensor, an active filter creating a shear sternness of frequency characteristic curve less than 24dB an octave, a square-law detector, and a recording device. The indications of this device have linear dependence on active power in range of 0–2 kW. The cavitometer measures cavitation pressure from 5 up to $5 \cdot 10^4$ Pa in the frequency band 18–60 kHz with accuracy ±10 %.

The pressure in cavitation area is perceived by measuring probe 1, attached to a piezoelectric transducer 3 with the elastic waveguide 2. The electrical signal from the transducer 3 comes to the amplifier 4, arranged in a body of the sensor and serving for coordinating a high-ohms circuit of the transducer with the input of the measuring device. The attenuator 5 serves for attenuation of input signal. The band-pass filter 6, made on the "Chebushev scheme" (The Chebyshev filter is an analog filter with a steep slope in the frequency response) of the third order with band of 200–800 kHz, selects a portion of the spectrum of a signal, characteristic for cavitation impulses. After the amplification, the signal passes through circuits of the mean-square detector 8 and the amplifier 9 and then moves to indicator. Unit 10 is a power supply of the measuring device and sensor.

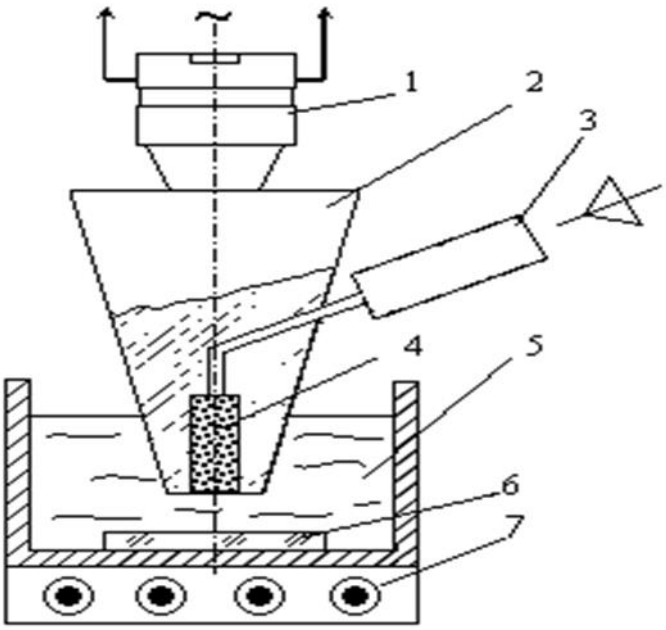

Figure 2. Scheme gas activation in melts (1-US transducer. 2 - US radiator, 3 - tube, 4 - capillary-porous body, 5 - solder, 6 - soldered element, 7 – heater)

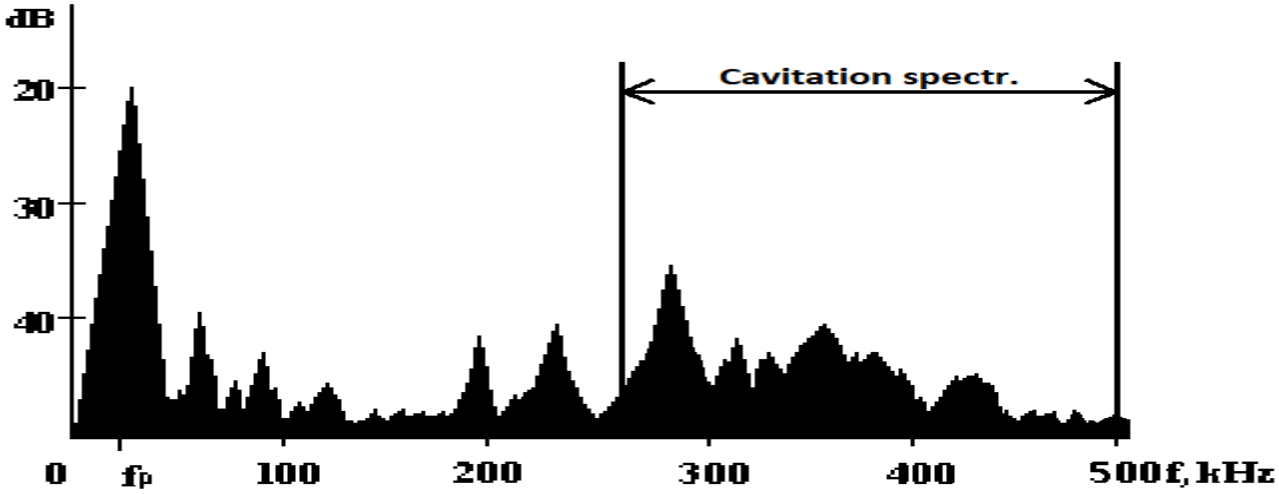

Figure 3. Cavitation noise spectrogram (spectral intensity in decibels of ultrasonic vibrations in solder)

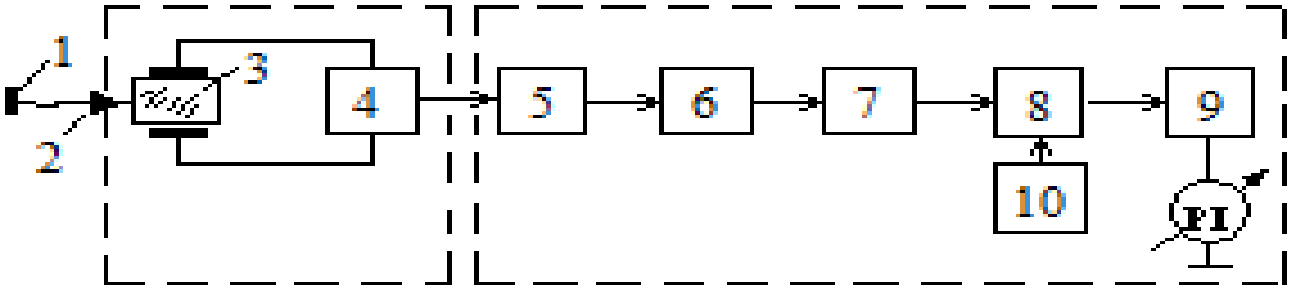

Figure 4. Cavitometer scheme (1 - measuring probe, 2 - waveguide, 3 - transducer, 4 - amplifier. 5 - attenuator, 6 - band-pass filter, 7 - amplifier, 8 - mean-square detector, 9 - dc amplifier, 10 – unit)

To the analysis of thermal fields, it is applied mobile thermal camera MobIRM4 with a sensitive element - microbolometer UFPA (160x120 pixels, 35 mm), 8-14 microns working in a spectral range. The size of a field of the analysis has made 25° x 19°, focus of 12,6 mm. Sensitivity of the thermal camera 0,1 °C. Measurements were spent on distance of 50 sm from a liquid upper edge. Device adjustment has been made on a reference source of boiling water. For stability of results the measurements were spent in the form of several series after bath warming up in a current of 20 minutes, and then by means of program IR Analyzer V1.7 the thermal fields of distribution of temperatures in the set sites of a bath is received.

The US metallization of glass-ceramic materials was performed in the chamber of the experimental setup (**Figure 5.**) with a residual rarefaction of 1–10 Pa. For the metallization, a low-melt Sn–10Zn solder and experimentally developed Pb-Sn-Zn-In solder on the basis Sn with the addition of Zn and in were used [22].

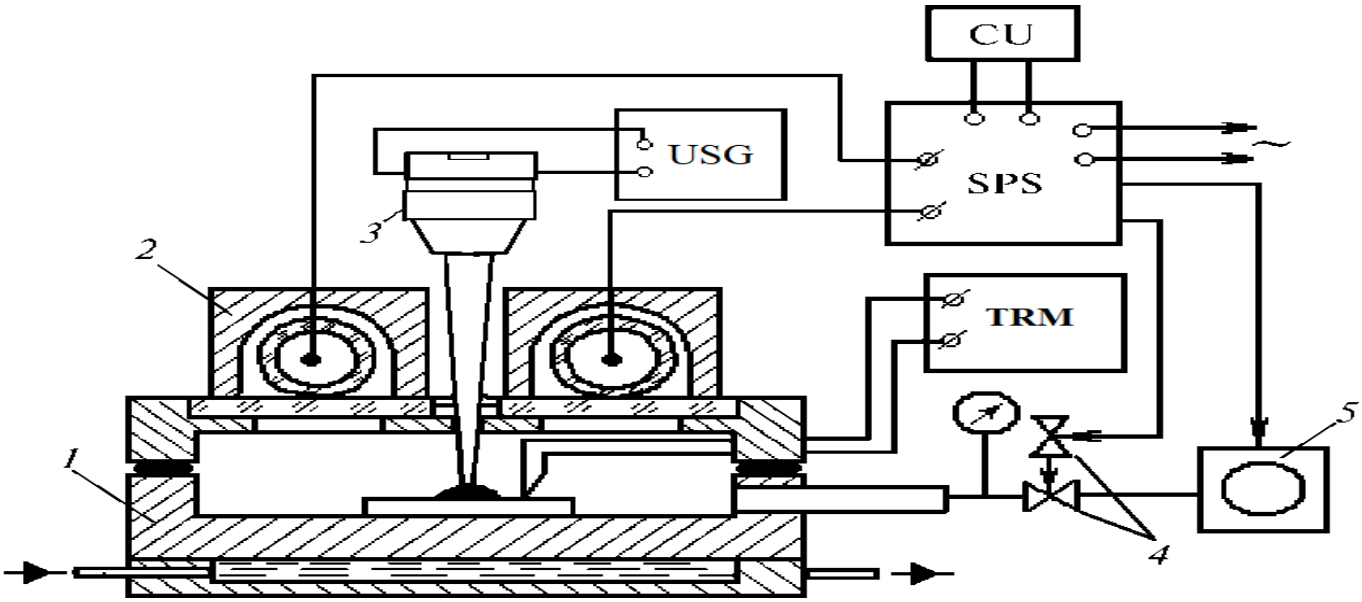

Figure 5. Schema of US and IR radiation activation soldering: 1 – chamber, 2 – IR heater,3–US transducer, 4 – IR valves, 5– compressor

US vibrations with an amplitude of 10–15 mkm and a frequency 22 kHz were introduced into the melt using a radiator in the form of a concentrator of the Fourier type. The melt was heated by IR radiation from two halogen lamps with a power of 1 kW located in parabolic reflectors. The voltage at the IR lamps was supplied from a stabilized power source (SPS) controlled by a control block (CB). The rate of the IR heating amounted to 10–15°C/sec. The temperature of the melt was measured in the working zone using thermocouple and digital measuring device-regulator TRM 201(OVEN).

4. Results and discussions

The analysis of thermal fields has shown, that the liquid temperature in US bath as a result of cavitation process raises. The greatest increase (to 10°C) occurs in a zone of the developed cavitation that is connected with warmth allocation at a collapse of cavitation cavities. At gas activation temperature of the liquids near to a nozzle approximately on 0,7°C above in comparison with temperature on some distance from it.

Gas saturation of liquids and melts causes increase in cavitation pressure depending on speed of gas and sizes of filter cells. Under the influence of elastic US fluctuations, the formed cavitation's germs pulse in a melt near to a surface of a soldered surface and slam at US pressure $2 \cdot 10^5$ Pa, created on a compression half-cycle. Pressure at which inert gas moved in a melt, depended on viscosity of solder and amplitude US

fluctuations.

By the help of cavitation indicator, it is established that gas cavities with the sizes 10–50 microns slammed, increasing level of cavitation pressure that activates US processing, including metallization by fusible solders of nonmetallic materials. Local cavitation pressure in a melt at the expense of initiation of a considerable quantity of cavitation germs increased on 20–25%, and reached a maximum at speed of inert gas of 4-6 m/min and the sizes of cells 10 microns (Figure 6.) The big sizes of cavities (over 100 microns) result to formation of a gas cavity which does not slam at levels of US intensity of (2–5) $\cdot 10^5$ Pa.

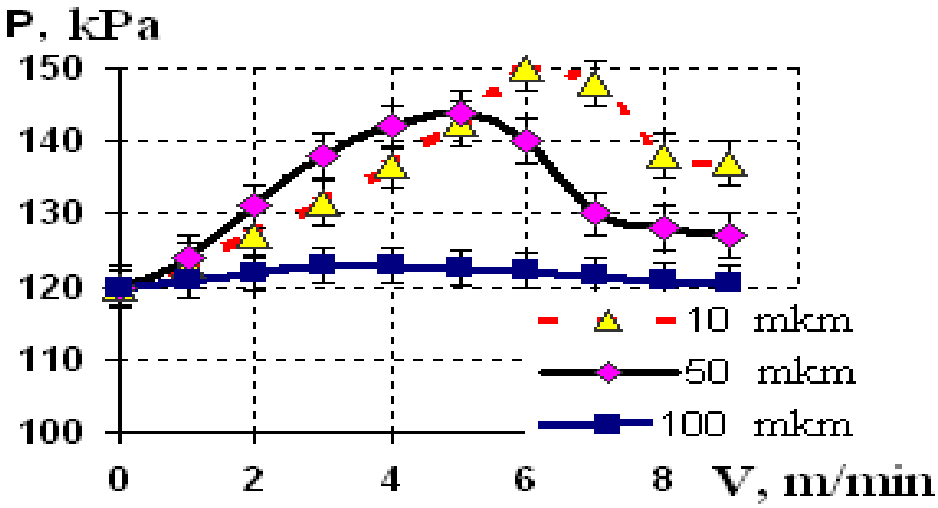

Figure 6. Cavitation pressure vs. speed of gas and sizes of cells

The results of modeling diffusion process showed that the US activation increased the concentration of the diffusing elements of Zn and Al in the interface depth by 15–20% on average, and the combined activation by the US and electric fields increased it by 30–45%. With increase amplitude and frequency of US vibrations, the concentration growth was observed, since the energy quantity adsorbed by melt increased (**Figure 7.**). The combined activation of melt–soldered material system by US vibrations energy and powerful current pulses additionally increased the heat energy. This allows reaching the soldering temperature at a greater rate, increasing wettability of the surface by solder.

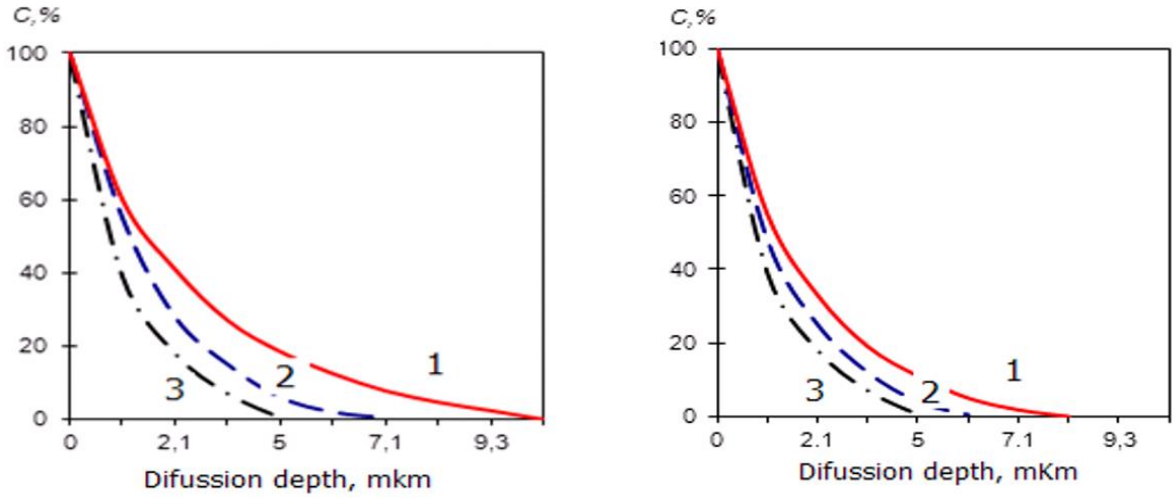

(a) (b)

Figure 7. Effect of US activations on the diffusion concentration: a - amplitude ultrasonic oscillation 20 mkm, b – 10 mkm: 1 - current and US activation, 2 - US activation, 3 – non-activation

The width of the diffusion zone measured using the scanning electron microscope, in this case, amounted to 4–5 μm for Sn-10Zn and Sn-39Pb (Figure 8). For the Sn-10Zn solder, the diffusion zone was slightly wider because of the electro mobile Zn presence in the melt, which migrated to the interface and then deeper in the aluminum alloy thus increasing the width of the diffusion zone. The width of the interface increased to 6–8 μm owing to the enhancement of the diffusion interaction and aluminum electro migration into the solder if compared with its size of 1.5 μm at the US activation.

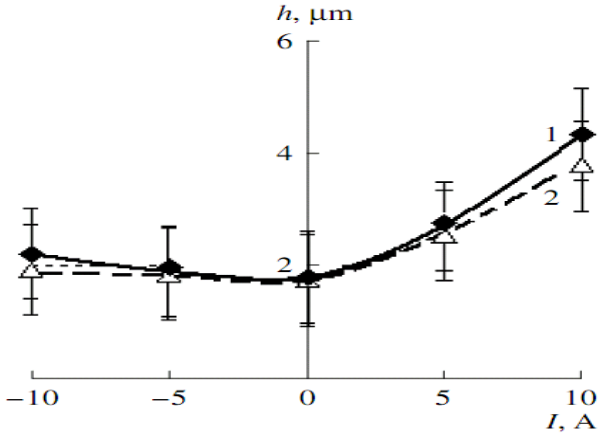

Figure 8. Dependence of the interface width vs. the direction and magnitude of the current pulses in solders: (1) Sn-10Zn, (2) Sn-39Pb.

5. Conclusions

Gas saturation of liquids and melts raises level of cavitation pressure upon 20–25 % that allows to intensify US processing, for example, clearings in liquid environments, to increase durability of coupling of metallization with ceramic and glass-ceramic materials, to reduce time of soldering processes, a tinning, metallization, to raise reliability of electronic devices at the expense of reduction of thermal influence.

Practical verification of the combined effect of concentrated energy flows of ultrasonic and electrical current on the processes of contact joints formation of Al alloys using Sn-Pb and Sn-Zn solders showed that strength of joints of materials with different chemical composition increases by 1.5–1.8 times due to the intensification of diffusion processes.

Flux–free ultrasonic soldering is non-polluting process and is more economic, as such operations as fluxing and clearing, demanding expenses of time and materials, are excluded. US soldering in some cases is a necessary condition of internal installation and hermetic sealing of the microelectronic equipment. US soldering connect to the help difficult soldering materials: nickel, aluminum, magnesium and titanic alloys, and also nonmetallic materials: ceramics, glass, ferrite. It creates an opportunity of economy of the precious metals rendered on dielectric surfaces of electronic components as metallization.

Disclosure statement

The author declares that he has no known competing financial interest or personal relationships that could have appeared to influence the work reported in this paper.

References

[1] Leighton TG, 1994, The Acoustic Bubble. Academic Press, London.

[2] Kolenak R, 2008, Solderability of Metal and Ceramic Materials by Active Solders. Forschungszentrum, Dresden.

[3] Abramov OV, 1998, High–Intensity Ultrasonics. Theory and Industrial Applications. OPA, Amsterdam.

[4] Naka M, Hafez KM, 2003, Applying of Ultrasonic Waves on Brazing of Alumina to Copper Using Zn-Al Filler Alloy, Journal of Materials Science. 38(16), 3491-3494. DOI:10.1023/A:1025161120349

[5] Lanin VL, 2015, Application of the Concentrated Power Streams in Electronics Industry. Scholar's Press, Saarbrucken.

[6] Ensminger D, Bond LJ, 2012, Ultrasonics: Fundamentals, Technologies, and Applications. CRC Press, Boca Raton.

[7] Subramanian KN, 2007, Lead-Free Electronic Solders. Springer-Science, New York.

[8] Chinnam RK, Fauteux C, Neuenschwander J, Janczak-Rusch J, 2011, Evolution of Microstructure of Sn-Ag-Cu Solder Joints Exposed to Ultrasonic Waves During Solidification, Acta Materialia, 4, 1474–1481. DOI.org/10.1016/j.actamat.

[9] Nagaoka T, Morisada Y, Fukusumi M, Takemoto T, 2009, Strength and Corrosion Resistance of a Solder Joint in Ultrasonic Soldering of Aluminium Using Quasi-Melting Solder. Welding International, 12, 879–885. DOI.org/10.1080/09507110902836960.

[10] Kolenak R, Kostolny I, Drapala J, et al., 2020, Direct Ultrasonic Soldering of AlN Ceramics with Copper Substrate Using Zn–Al–Mg Solder. Metals. 10(2), 1–18. https://doi.org/10.3390 /met10020160.

[11] Dušek K, Plaček M, Čepek M, et al., 2017, Ultrasonic Soldering, Mechanical Properties of Solder Joints. Proc. of 40th International Spring Seminar on Electronics Technology (ISSE). 10–14 May 2017. Sofia, Bulgaria, 1–4.

[12] 2008, Technical Data Sheet BALVER ZINN Solder. https://www.yumpu.com › document › view › tech.

[13] Belyakov SA, 2008, Ultrasonic Modification of Sn-Ag-Cu Alloy Microstructure. Proc. of 9th Inter. Workshop and Tutorials, EDM'2008. Erlagol, 58–59.

[14] Faridi H, Devletian J, Le H, 2000, A New Look at Flux-Free Ultrasonic Soldering. Welding Journal. 9, 41–45.

[15] Pericleous K, Bojarevics V, Djambazov G, et al., 2019, Contactless Ultrasonic Cavitation in Alloy Melts, Materials. 12, 1–13. https://doi.org/10.3390/ma12213610

[16] Agranat BA, Gudovich AP, Nezhenko LB, 1986, Ultrasound in Powder Metallurgy. Metallurgy, Moscow.

[17] Shilyaev AS, 1992, Ultrasonic Treatment of Melts in the Production and Restoration of Machine Parts. Science and Technique, Minsk.

[18] Lanin VL, 2008, Activation of Soldered Connections in the Process of Formation Using the Energy of Ultrasonic and Electric Fields, Surface Engineering and Applied Electrochemistry. 3, 234–239. https://doi: 10.3103/S1068375508030113.

[19] Lanin VL, 2013, Increase Activity Cavitations in Liquids and Melts at Ultrasonics Processing, Open Journal of Acoustics. 3A, 13–15. https:// doi:10.4236/oja.2013.33A003

[20] Ilyichev VI, Koretz VL, Melnicov NP, 1989, Spectral Characteristics of Acoustic Cavitation., Ultrasonics. 27, 357–361.

[21] Lanin VL, 2003, Cavitation Intensity Investigation at Ultrasonic Soldering. Proc. of Ultrasonics Int. Conf., 1–3 July 2003, Granada (Spain), 154–156.

[22] Lanin VL, 2010, Ultrasonic Soldering in Electronics: New Opportunities, Solid State Electrochemistry by T. G. Willard. 2010. Nova Science Publishers, New York: 201-211.

Journal of Electronic Research and Application, 2021, Volume 5, Issue 3
http://ojs.bbwpublisher.com/index.php/JERA
ISSN Online: 2208-3510
ISSN Print: 2208-3502

Research on Audit Data Analysis under the Background of Big Data

Li Zhang*

Academy of Accounting, Guangzhou Huashang College, Guangzhou 511300, China

***Corresponding author:** Li Zhang, baobif713517@163.com

Abstract: With the arrival of the era of big data, the audit thinking mode has been promoted to change. Under the influence of big data, audit will become an activity of continuous behavior. Through cloud data, the staff can control the operation status and risk assessment of the whole enterprise, timely analyze, control and respond to risks, and protect the enterprise to reduce risks. With the advent of the era of big data, audit data analysis is becoming more and more important. At the same time, a large amount of data analysis also brings challenges to auditors. Methods to deal and solve the challenges has become an urgent problem to be solved at present. This paper mainly studies the challenges and countermeasures brought by the changes of audit approaches and methods to audit data analysis under the background of big data, so as to continuously innovate and practice the improvement of audit technology and promote the healthy and rapid development of social economy.

Keywords: Big data; Audit data analysis; Research

Publication date: May 2021; ***Online publication:*** May 31, 2021

1. Introduction

In 2020, the Ministry of Industry and Information Technology will issue the relevant guidance on the development of big data, making a comprehensive deployment to promote the deep integration of big data and enterprise development, and proposing to strengthen data convergence, sharing, application, governance and security to promote industrial development. In this context, major enterprises have carried out digital transformation and upgrading, breaking the original business model, we will comprehensively develop information technology and big data. Big data is the general trend of the development of informatization. With the development of the comprehensive informatization of the auditee, the demand for audit data analysis and processing is on the rise greatly. As a comprehensive economic supervision department, audit will certainly face great challenges under the background of big data.

Big data refers to the storage and calculation of a large number of changeable terminal data through information storage and analysis based on cloud computing, which is characterized by large quantity, variety and speed. With the combination of big data and audit, continuous audit will become a reality. Auditors can use cloud data to grasp the changes of company operations and risks, timely analyze and warn internal risks, control and eliminate risks and hidden dangers, which can produce good social utility. Under the background of big data, audit data analysis should actively adapt to and comprehensively serve the needs of current economic development. However, in the use and analysis of data, it is bound to face a series of problems. How to solve these problems has become an urgent problem to be solved at present. On the basis of the challenges to traditional auditing in the context of big data, this paper intends to explore the ways and methods of auditing in the mode of big data, mainly analyzing the problems and solutions in the analysis and use of audit data, so as to deal with the opportunities and challenges brought by the development of The Times, which has a certain realistic research value.

2. What is Big Data and Audit Data Analysis

Big data refers to a data set whose size exceeds the acquisition, storage, management and analysis capabilities of conventional database tools, but it does not mean that a data set with a specific TB value must be considered as big data (McKinsey, 2011). Big data has 4V characteristics, such as Volume of data, rapid data flow, Velocity of dynamic data system, Variety of data types and huge data Value.

At present, the production and business activities of enterprises are more active, forming a large number of data and information covering a large number of contents. Big data technology can provide cross-field, cross-time and cross-space quantifiable massive data for audit work, so that a large number of relevant audit information can be recorded and analyzed. Big data audit based on the analysis of more complex large unstructured data analysis, such as association rule mining, clustering analysis, genetic algorithms, machine learning, and according to different data types of cross analysis, semantic analysis, graphic transformation, speech recognition, completely broke the traditional descriptive analysis and reporting, has strong flexibility is more suitable for the comprehensive analysis, The adoption of big data analysis mode can obtain deep information and improve the utilization rate and value of data information.

3. The impact of big data on audit analysis

3.1. Change the thinking mode of audit analysis

The arrival of big data has led to changes in audit thinking mode. Compared with traditional audit thinking mode, it relies more on audit sampling mode and lacks the ability to obtain, process and analyze all data. At the same time, traditional audit is limited by time and place. For example: the uncertainty of confirmation time; The inquiry is limited to the employee's working hours; Due to the limited time and economic cost of the audit work to and from different cities on the site, a variety of constraints lead to the inability to carry out the audit work flexibly. Big data allows audit work to be free from time and place restrictions. Auditors obtain all required data through cloud records, view the relevant data of the audited entity and the transaction records of the corresponding entity through authority, and judge the authenticity and accuracy of data information.

Big data can make full use of computers to obtain huge data through auditing software. Computer software can be used for screening and selection, and useful information can be found in a short time according to different auditing purposes. The combination of manual and machine can make the control range of auditing wider, and the time span can be effectively improved. With the application of information technology, the information obtained by auditors has changed from the original manual vouchers to the big data with high generality. Auditors are required to transform the audit mode into a model combining big data analysis and spot check based on the data.

3.2. Improve the accuracy of data analysis

With the support of big data, audit data is based on data transmission, which greatly improves the accuracy of data, ensures the overall and orderly transmission of follow-up data, and improves the value and communication of data itself. When obtaining audit evidence, the causal logic relationship is based on the traditional way of thinking. However, big data will make more use of correlation analysis, reduce the dependence of traditional auditors on the causal logic relationship, better discover suspicious points and help to accurately expose illegal acts, so as to make the audit conclusion more accurate. Big data records and stores the transaction behavior data generated by enterprise operation in different subsystems, leaving “footprints,” and reproduces and simulates the transaction operation scene of enterprises through central data integration and classification, so that there is no hiding place for all kinds of transactions of enterprises. These "footprints" not only provide legal protection to enterprises, but also provide a strong deterrent to illegal and criminal activities, which can ensure the accuracy of audit.

3.3. Reduce analysis cost and improve analysis efficiency

With the continuous progress of information technology, the data quantity changes from terabyte level to zettabyte level, which promotes the stream processing mode to replace the batch processing mode gradually. Through the use of models and software, it can help auditors to obtain and capture valuable information, realize real-time analysis, help auditors to find and solve problems in the audit in the first time, and improve the efficiency of audit work. Through the full use of data mining, it can carry out classified mining on the scattered mass data, effectively evaluate the operation situation of enterprises and make targeted comparison, improve the timeliness of audit and the authority of audit analysis. In the context of big data, auditors can better audit based on the actual situation of big data, reduce audit costs, and at the same time make full and effective use of data mining, cloud database, distributed structure, network audit and other innovative and diversified technical means to constantly improve audit efficiency.

3.4. Improve the convenience of data acquisition

Scrutiny under the background of big data, can use computer as an audit tool, increase the accuracy, time, scope and transaction records from the bank, the enterprise transaction business trading records, etc. These actions by the government authorized, screening the effective information from a single site audit innovation as the on-site audit and remote audit, improve the work quality, convenient data acquisition.

4. Problems faced by audit analysis in the context of big data

4.1. The reliability of audit data is low

In the computer auditing environment, the data is stored in magnetic medium, and the information needed for analysis can only be called out from the computer system through man-machine dialogue. In the process of data generation, there are many artificial manipulation links, and different units will generate different data formats due to the use of different software. In the process of data collection, auditors cannot determine the authenticity of the data and the conversion of different data formats produces unforeseeable errors, which leads to the increase of audit risks.

4.2. The analysis method of audit data is backward

Although computers have infiltrated into all areas of audit work, most of them are still in the statistical analysis of data or online inquiry of laws and regulations, information, etc., and the application degree of computer analysis is still low. Data analysis technology is difficult to master, and the effective integration of big data analysis method and audit limits the development of big data audit.

4.3. Network security is difficult to guarantee

The era of big data not only brings explosive growth of information, but also puts forward higher standard requirements for information security. Audit data often involves confidential or internal information of the auditee. How to ensure data security and prevent data leakage are also the key issues to be solved in big data audit. The security of audit data is likely to lead to the following problems. First, the software system is not safe, and it cannot ensure the stability and fluency of the core information software and the accuracy and uniformity of the files. Second, the environment of the computer room is not safe, and the related hardware facilities of the data room are the basis to ensure the construction of audit information, so the security and network security of the computer room must be guaranteed. Third, the database is not safe, did not do a good job of database system firewall and authority configuration work.

4.4. Auditors lack IT technology and big data thinking

The use of the new audit methods also has new constraints on the requirements of auditors, which requires

a compound high-quality audit team. It is emphasized that auditors should not only master relevant knowledge of accounting and audit, but also have a certain comprehensive ability of information technology (IT), big data and cloud computing. The audit industry relies more on “experience-driven business” and lacks the research and development of analysis models based on its own characteristics. It also lacks the mastery of "data-driven" analysis technologies such as association rule classification, crowdsourcing, data fusion, data mining and analysis technologies, cloud computing, data warehouse and other visualization technologies. Currently, auditors have solid professional skills in auditing, but lack systematic learning of computing information technology knowledge, big data auditing thinking, and data processing and analysis ability. Traditional auditors still rely more on audit experience. Without changing the thinking of big data analysis, audit work cannot keep up with the pace of the era of big data.

5. Countermeasures and Suggestions

5.1. Accelerate the implementation and implementation of relevant audit systems

Under the background of new era requires new counter measures, in combination with the characteristics of the era of big data design reasonable auditing theory, establish and improve the response to new information technology environment audit laws and regulations, the audit staff put forward new career requires that the power and responsibility in the process of auditing and data confidentiality work put forward the corresponding rules and regulations and laws, ensure the authenticity of the data collection. For the government, while encouraging enterprise informatization, it should also guide the development of audit under the background of big data from the legal level. For the audit department, it is necessary to make a data reserve plan to eliminate the “information island” and establish a perfect audit data center. For the IT industry, IT is necessary to understand the audit department's demand points for big data and solve the integration of software services.

5.2. Ensure data security

Data explosion era, data security problems will follow, a large number of data leakage is bound to cause unfair phenomenon to the social economy. To solve the problem of data security, to prevent data loss, hacker attacks, systems and data tampering brings new audit risk, audit personnel should strengthen the sense of confidentiality, take corresponding safety precautions, such as audit electronic data to apply computer technology to identify the authenticity of electronic data, check whether there is a computer data system vulnerability, set up an inspection team to regularly evaluate the safety factor of the internal system. Auditors also need to improve IT security governance and compliance at the same time, do a good job in the construction of firewall and audit authority, privilege prevention, leak prevention, attack prevention, from the inner network to the outer network identity authentication and authorization to prevent abuse of authority control, ensure information security and infrastructure security.

5.3. Establish database and audit data analysis platform

Audit institutions need to comprehensively enhance the construction of information engineering, improve the processing ability of audit data, attach importance to information collection, and establish a unified and standardized industrial database. Big data is the beginning of the progress of IT industry, IT become the new engine for social economic growth, is a new integration and restructuring the traditional organization structure, and the big data only after information gathering, classification and correlation can realize its value, at present because the auditees financial behavior is not standard auditors from more than one way to get the audit data, content is not the real problem, In order to hinder the matching and association of data, we should establish a database, strengthen the related research on audit practice and audit theory, and construct a big data linkage audit mechanism with aggregation effect, which is led by the government,

promoted by audit and participated by IT industry.

Our country enterprise itself hard to meet the large data storage and operation, need the government out of the relevant support policy for the enterprise equipped with large storage performance excellent multi-function software and hardware equipment, the establishment of national government level cross-industry audit data platform, establish good audit software selection mechanism, the audit innovation technology with outstanding contribution award rewards, to encourage technological innovation, Accelerate the application and implementation of audit technology.

5.4. Cultivate versatile talents and establish a professional analysis team

China's big data audit started late, accounting staff knowledge structure is not comprehensive, the lack of understanding and use of big data and the habit of traditional audit mode will hinder the recognition of new audit methods, only experience and a single verification of data will inevitably increase the risk of audit. At the same time, under the current background of big data, it is difficult to reduce audit risks without big data and the direction of social progress. On the premise of paying close attention to hardware facilities, accounting firms also need to strengthen staff training and improve CPA's ability of big data audit analysis in many aspects. Auditors need to cultivate the vision of big data, improve the data index system, accelerate knowledge innovation, enhance the practical ability of audit staff to cope with the development, improve the construction of audit team and cultivate compound audit talents, so as to provide guarantee for the development and utilization of data.

In the future, the data faced by auditors will grow exponentially, which puts forward new requirements for the data processing and data analysis ability of auditors. Traditional auditors should gradually change from relying on audit experience to relying on data analysis, so that the audit work can keep up with the pace of the era of big data. Auditing departments should train auditors to study computers and data information as part of their daily training. The firm can also build a professional analysis team, establish a simple and visual data analysis system, visually and conveniently present the audit analysis method, process and results, copy the successful test, and quickly improve the audit data analysis ability. Firms should pay attention to the cultivation of corporate data culture, the formation of auditors' data literacy, and the cultivation of data as a "second language."

6. the conclusion

Under the background of big data, many innovative and diversified data technologies will continue to emerge. Audit work will continue to change and innovation, from the traditional means to cloud database, network data mining, distributed structure, the use of these various methods make the amount of data, data types, data processing methods have undergone significant changes. Under the background of such changes, auditors are faced with the challenge of changing from audit mode to audit method and method to adapt to the future. In the era of big data, auditors should set up the consciousness of "data first," establish the idea of data core, make full use of data analysis function to identify risks and improve efficiency, and combine data analysis with on-site investigation to better implement audit work. Big data will become the new power of human economic construction, and it is undeniable that the audit work has also ushered in new opportunities and challenges. On this basis, we should analyze the current situation, continue to innovate practices, and promote the healthy and rapid development of social economy.

Funding

Key Major of Audit Science in quality Engineering Project of Private Universities in 2020 (Grant No. : HS2020ZLGC06), Supervisor System Research Project of Huashang College of Guangdong University of Finance and Economics in 2018 (Grant No. : 2018HSDS03), University Quality Engineering of

Huashang College in 2021 (Grant No. : HS2021ZLGC19)

Disclosure statement

The author declares no conflict of interest.

References

[1] Cui Z, 2021, Innovative Application of Data Analysis Technology Method in Enterprise Audit. Journal of Finance and Accounting, 4(07):82-88.

[2] Zhu, Cai, Li, et al., 2019, A Research on the Application of Big Data in Auditing. International Journal of Audit Management, 17 (1): 1-9.

[3] Tang K, 2018, Impact on Audit in the Era of Big Data. Communications World, (08).

[4] Zhang Z, Cheng X, 2017, Auditing Data Analysis Framework Based on Text Mining in Big Data Environment. Friends of Accounting, (16):117-120.

[5] Zhu L, 2016, Research on the Influence of Big Data and Cloud Technology on the Full Coverage of Audit Supervision. Journal of Audit, (05).

[6] Gu H, 2015, Preliminary Study on Audit Data Analysis Technology under Big Data Environment. China Management Informatization, (03):45-47.

[7] Wang Q, 2015, Analysis of Audit Data in Big Data Environment. China Audit News,2015-12-30(006).

[8] Qin R, 2014, Research on the Impact of Big Data and Cloud Computing Technology on Audit. Audit Research, (06).

Journal of Electronic Research and Application, 2021, Volume 5, Issue 3
http://ojs.bbwpublisher.com/index.php/JERA
ISSN Online: 2208-3510
ISSN Print: 2208-3502

Exploration on Research Methods for Exploring Human Response to Luminous Environment with Chromogenic Windows Applied

Runqi Liang[1], Yupeng Wu[2], Jiawei Yao[1], Yongming Zhang[3]*

[1]College of Architecture and Urban Planning, Tongji University, Shanghai 200092, China

[2]Department of Architecture and Built Environment, University of Nottingham, Nottingham NG7 2RD, UK

[3]Sino-German Institute of Engineering, Tongji University, Shanghai 200092, China

Corresponding author: Yongming Zhang, zhangyongming@tongji.edu.cn

Abstract: Chromogenic windows enable both energy-saving and daylighting regulation. However, the human response to the luminous environment affected by them is difficult to test, since their features of dynamic change and tinting automatically. This study explores the research methods, including experimental design and statistical analysis, by literature review and an experiment demonstration. The results show that a proper size of the test room is significant to obtain desired data, and the advanced VR technologies have the potential to be applied for testing these dynamic variables. Bayesian approaches are recommended to be tried and get more accurate interference about the experimental results.

Keywords: Chromogenic windows; Building luminous environment; Human response; Statistical analysis; Experimental design

Publication date: May 2021; ***Online publication:*** May 31, 2021

1. Introduction

Over the last decades, sustainable building technologies have been well investigated. A large amount of energy use in buildings makes it sense that energy-saving approaches are desired. The chromogenic smart window (e.g., electrochromic, thermochromic, gasochromic, and photochromic) is a type of innovative approaches to regulating indoor thermal and luminous conditions [1]. That can reduce the undesired solar heat gain dynamically transmitted into the building, diminishing the possibility of overheating by solar radiation and achieving energy conservation simultaneously. Various studies have been undertaken to explore their energy performance, and electrochromic windows have commercial products, other types of chromogenic windows are still on the lab stage. Since the chromogenic windows have features of tinting with their solar transmittance changing during the work, such as blue, brown, etc., the indoor luminous environment is affected by the chromatic glazing as well. Human response to the daylighting conditions affected by the chromogenic windows is significant to be figured out before these innovative smart windows being applied in practice.

However, the features of 'dynamic' and 'tinting' improve the difficulties of experimental methods on human response to chromogenic windows, and statistical analysis influences the results as well. This study aims to explore the appropriate research methods specified for this type of dynamic chromatic glazing applied in working space, by using a self-designed experiment and literature review. It is proposed to give more particular suggestions to improve and accelerate the development of these energy-efficient smart windows.

2. Literature review of research methods

This section demonstrated the research methods from three aspects, including experimental design for windows' application, statistical analysis tools, and innovative virtual reality (VR) technologies.

2.1. Experimental design

According to the size, the experiments for human response can be classified into two types:

(1) Small-scale, where participants can look into the test chamber and observe the given targets and complete questionnaires [2-3].

(2) Full-scale, where participants are invited to walk into the test room and undertake some visual or non-visual tasks [4].

Both methods are valid to obtain desired results, however, the subjective assessment about the whole indoor luminous environment by using a small-scale test room cannot restore the perception overall. the test of colour shifts affected by different window glazing (**Figure 1.** (a)) [5], the observers are hard to receive all information indoors from the top view. While if a full-scale experiment was applied to test different types of windows, the change of window conditions will not be convenient as the small-scale one, as is shown in **Figure 2.** (b) [4].

(a) (b)

Figure 1. Two sizes of test room (a) small scale; (b) full scale [4, 5]

2.2. Statistical analysis

Most of the evaluations on the luminous environment are based on the subjective response and objective performance from samples of occupants drawn from the building users. Therefore, statistical analysis has to be applied to deal with these results, in the perspective of analysis methods, most of the studies chose to use the classical frequentist approach, such as null hypothesis significance testing (NHST) depending on the sample size and magnitude of effect, to detect the results performance [6-8].

Bayesian inference is proposed to be an alternative method to implement the analysis [9]. Different from frequentist approaches, Bayesian estimation can incorporate prior knowledge (i.e., based on existing knowledge), and combine the likelihood from the new data, resulting in a posterior distribution. In other words, Bayesian analysis is used to re-allocate the degree of belief across possibilities [9]. Additionally, the Bayesian hypothesis test can quantify evidence that the data provide for the null hypothesis (H0) and the alternative hypothesis (H1). Lee et al [10] developed a Bayesian approach for providing accurate predictions

for personalized thermal preference profiles. Another study conducted by Wang and Hong [11] used the Bayesian inference approach to define new occupants comfort temperature range in office buildings of the USA. Xiong et al [12] also use the Bayesian approach to infer the visual satisfaction profile in daylit office based on previously collected data from experiments. Therefore, it is believed that the Bayesian approach can be applied to validate experimental models and achieve more accurate inference based on known information.

2.3. VR technologies

Since the chromogenic windows have the features of dynamic changing of solar transmittance, which increase the difficulty of setting up and control the experiments. In the past decades, the combined use of advanced VR technology and building design have realized the test of user behaviour and achieve energy-saving [13-14]. Shahinmoghadam et al. integrated the Internet of Things (IoT) and VR in the development of immersive VR applications for real-time monitoring of thermal comfort conditions. The prototype of the system has been implemented and used to support the consistency between the system output and the actual thermal sensation observed under various conditions [15]. Vittori et al. redesigned an office through VR and recorded the sense of presence, with a satisfaction rate of 76%. The VR design environment is used to reproduce key variables of design, involving artificial lighting colour temperatures. VR evaluation significantly reduces the cost and achieves human-centred energy efficiency [16]. Yeom et al. used VR to determine the best window-to-wall ratio of buildings that can achieve energy efficiency and a healthy working environment [17]. It can be seen that VR is helpful for the building environment evaluation with multiple variables.

3. An experiment of thermochromic windows

The thermochromic (TC) window is one of the most promising smart windows that tints with temperature difference automatically, a series of experiments were designed to test the human response to the luminous environment with thermochromic window applied, exploring the specific experimental and analysis methods.

3.1. Experiment setting up

To achieve both Immersive experience of participants and convenient change of window conditions, a test cubicle with the dimension of 1.5m (length)*1.2m (width)*2.1m (height) was built, and the indoor luminous affected by TC window were simulated by a virtual window so that the illuminance levels could be controlled manually. Three window conditions with two horizontal illuminance levels (100lux and 350lux):1) TC_Bronze, standing for VO_2 nanoparticle film; 2) clear glazing as a reference; 3) TC_Blue, representing the iron-liquid based TC material, which can tint from clear to blue during the working. Detailed parameters of experimental conditions were shown in **Table 1.**

During the experiment I and II, 31 participants were invited to attend the test, respectively, they were required to complete objective tasks (Landolt rings visual test) and subjective assessment (questionnaires) under each window condition, the sequence of window conditions was randomized.

3.2. Data analysis using Bayesian approaches

The collected data were analysed by firstly using the classical frequentist approach for the experiment I and II separately, and the results show that TC_Bronze is relatively more acceptable in general. Since different participants were used for these two experiments, the both classical Mann-Whitney U test and Bayesian approaches were tried to do the independent paired comparisons between I and II, to do exploration on analysis methods. For Bayesian approaches, BF10 present the evidence for supporting H0 (i.e., no

difference) and H1 (i.e., difference significant).

Table 1. illuminance and colour temperatures (CCT) under three window conditions.

Window conditions	Experiment I		Experiment II	
	Illuminance(lux)	**CCT(K)**	**Illuminance(lux)**	**CCT(K)**
1. TC_Bronze		4053		4056
2. Clear	100lux (±5%)	4903	350lux (±5%)	4911
3. TC_Blue		6934		7054

Table 2. Mann-Whitney U test and Bayesian Mann-Whitney U test of questions with significant difference between Experiment I and II.

	Window conditions	Mdn1-Mdn2		Mann-Whitney U test			Bayesian one	
		100lux	**350lux**	**Statistic**	**p**	**Effect Size (r_B)[a]**	**BF_{10}[b]**	**W**
Brightness	TC_Bronze	2	3	271.5	0.002*	-0.435	4.625*	689.5
	Clear	3	4	266.0	0.002*	-0.446	8.175*	695.0
	TC_Blue	2	3	328.5	0.024*	-0.316	1.682*	632.5
Uniformity	TC_Bronze	3	4	315.0	0.017*	-0.344	2.869*	646.0
	TC_Blue	2	4	335.0	0.035*	-0.303	1.268*	626.0
Alertness	TC_Bronze	3	3	310.5	0.007*	-0.354	1.658*	650.5
	TC_Blue	3	3	330.0	0.027*	-0.313	1.106*	631.0
Pleasantness	TC_Bronze	2	3	232.5	< .001*	-0.516	8.982*	728.5
	TC_Blue	2	3	328.0	0.023*	-0.317	1.005*	633.0
Naturalness	TC_Bronze	2	3	338.0	0.038*	-0.297	1.285*	623.0
Comfort	TC_Bronze	2	4	237.5	< .001*	-0.506	13.269*	723.5
	Clear	2	3	288.5	0.004*	-0.400	4.767*	672.5
Acceptance	TC_Bronze	2	4	244.0	< .001*	-0.492	10.282*	717.0
	Clear	2	3	262.5	0.001*	-0.454	7.468*	698.5
	TC_Blue	2	3	336.5	0.037*	-0.300	1.549*	624.5

* significant

a Effect size (r_B)：r_B<0.3 small effect, 0.3<r_B<0.5 moderate effect, r_B>0.5 large effect.;

b Bayes Factor (BF_{10}) ： 0.33<BF_{10}<1 is anecdotal evidence for H_0; BF_{10} =1 is no evidence; 1<BF_{10}<3 is anecdotal evidence for H_1; 3<BF_{10}<10 is moderate evidence for H_1; 10<BF_{10}<30 is strong evidence for H_1; 30<BF_{10}<100 is very strong evidence for H_1; BF_{10}>100 is decisive evidence for H_1.

It can be seen from the data in **Table 2.** that, brightness, uniformity, alertness, pleasantness, naturalness, comfort, and acceptance, the classical and Bayesian results are shown almost the same. However, classical results required both p and effect size (r_B) to show the degree of the difference caused by illuminance levels, while BF_{10} shows the difference straightforward with the finer classifications. A 5-level Likert scale was applied to all answers to the questions, and 1 is for the most negative answer, and 5 for the most positive one. In terms of medians, especially for Brightness and Acceptance, participants gave more positive answers during experiment II than that of experiment I under all of the three window conditions. Moreover, the results show that the uniformity, alertness, pleasantness and comfort are all increased in experiment II with higher illuminance levels under the TC window conditions. That means that under the chromatic luminous environment, higher illuminance can lead to a more positive response. In **Table 2.**, the cases with the effect size falling into the moderate range and BF_{10} falling into the anecdotal range indicate that the Bayesian method is more detailed to show the degree of illuminance effect.

4. Conclusions

This study explored the experimental methods and innovative analysis approaches by literature review and an experiment about the human response to the TC windows application, the experiment used a test cubicle, which is smaller than a full-scale room but it is accessible for participants. The proper size of the test cubicle enables the quick change of the window conditions as well. A review of VR technologies applied to optimize the building environment indicated that VR technologies have the potential to simulate daylighting conditions filtered by different window types, and creating various illuminance, CCT and other lighting conditions. Additionally, Bayesian approaches are suggested to be applied for getting more accurate inference, especially for these phased and batched experiments.

Funding

This work was supported by the project funded by the China Postdoctoral Science Foundation project (2019M661617), the Faculty of Engineering at the University of Nottingham through a PhD studentship awarded to Runqi Liang.

Disclosure statement

The author declares no conflict of interest.

References

[1] Jelle BP, Hynd A, Gustavsen A, Arasteh, et al., 2012, Fenestration of Today and Tomorrow: A State-Of-The-Art Review and Future Research Opportunities. Solar Energy Materials and Solar Cells. 96: 1-28.

[2] Vossen FM, Aarts MPJ, Debije MG, 2016, Visual Performance of Red Luminescent Solar Concentrating Windows in an Office Environment. Energy and Buildings. 113: 123-132.

[3] Dubois MC, Cantin F, Johnsen K, 2007, The Effect of Coated Glazing on Visual Perception: A Pilot Study Using Scale Models. Lighting Research and Technology. 39(3): 283-304.

[4] Chen X, Zhang X, Du J, 2019, Glazing Type (Colour and transmittance), Daylighting, and Human Performances at a Workspace: A Full-Scale Experiment in Beijing. Building and Environment. 153: 168-185.

[5] Matusiak B, Anter KF, Angelo K, 2012, Colour Shifts Behind Modern Glazing. University College

of Arts, Crafts and Design, Stockholm, available online: https://www.researchgate.net/publication/263470151_Colour_shifts_behind_modern_glazing

[6] Yu H, Akita T, 2019, The Effect of Illuminance and Correlated Colour Temperature on Perceived Comfort According to Reading Behaviour in a Capsule Hotel. Building and Environment. 148: 384-393.

[7] Ru T, de Kort YAW, Smolders KCHJ, et al., 2019, Non-Image Forming Effects of Illuminance and Correlated Colour Temperature of Office Light on Alertness, Mood, and Performance Across Cognitive Domains. Building and Environment. 149: 253-263.

[8] Revantino, Mangkuto, et al., 2018, The Effect of Illuminance and Correlated Colour Temperature, and Colour Rendering of Various Existing Light-Emitting Diode Lamps on Subjective Preference and Performance in Indonesia. Journal of Building Engineering. 19: 334-341.

[9] Kruschke JK, Liddell TM, 2017, The Bayesian New Statistics: Hypothesis Testing, Estimation, Meta-Analysis, and Power Analysis from a Bayesian Perspective. Psychonomic Bulletin & Review. 25(1): 178-206.

[10] Lee S, et al., 2018, A Bayesian Approach for Probabilistic Classification and Inference of Occupant Thermal Preferences in Office Buildings. Building and Environment. 118: 323-343.

[11] Wang Z, Hong T, 2020, Learning occupants' indoor comfort temperature through a Bayesian inference approach for office buildings in United States. Renewable and Sustainable Energy Reviews. 119: 109593.

[12] Xiong J, et al., 2018, Inferring Personalized Visual Satisfaction Profiles in Daylit Offices from Comparative Preferences using a Bayesian Approach. Building and Environment. 138: 74-88.

[13] Abd-Alhamid F, et al., 2020, Evaluating the Impact of Viewing Location on View Perception using a Virtual Environment. Building and Environment. 180.

[14] Flor JF, et al., 2021, Virtual Reality as a Tool for Evaluating User Acceptance of View Clarity Through ETFE Double-Skin Façades. Energy and Buildings. 231.

[15] Shahinmoghadam M, et al., 2021, BIM- and IoT-Based Virtual Reality Tool For Real-Time Thermal Comfort Assessment in Building Enclosures. Building and Environment. 199.

[16] Vittori F, et al., 2021, Subjective Thermal Response Driving Indoor Comfort Perception: A Novel Experimental Analysis Coupling Building Information Modelling and Virtual Reality. Journal of Building Engineering. 41.

[17] Yeom S, et al., 2020, Determining the Optimal Window Size of Office Buildings Considering the Workers' Task Performance and the Building's Energy Consumption. Building and Environment. 177.

Author Guidelines

Before your submission, please check that your manuscript has been prepared in accordance to the step-by-step instructions for submitting a manuscript to our online submission system. We recommend that you keep this page open for your reference as you move through the submission process.

If there are any differences in author guidelines between the print and online version, it is recommended that authors refer to the online version for use.

Manuscript Format

Journal of Electronic Research and Application accepts manuscript that is in MS Word or LaTeX format. All manuscripts must be written in clear, comprehensible English. Both American and British English are acceptable. Usage of non-English words should be kept to a minimum and all must be italicized (except for e.g. and i.e.) If you have concerns about the level of English in your submission, please ensure that it is proofread before submission by a native English speaker or a scientific editing service.

Cover letter

All submissions for *Journal of Electronic Research and Application* should include a cover letter as a separate file. A cover letter should contain a brief explanation of what was previously known, the conceptual advancement with the findings and its significance to broad readership. The cover letter is confidential and will be read only by the editors. It will not be seen by reviewers.

Title

The title should capture the conceptual significance for a broad audience. The title should not be more than 50 words and should be able to give readers an overall view of the paper's significance. Titles should avoid using uncommon jargons, abbreviations and punctuation.

List of Authors

The names of authors must be spelled out rather than set in initials with their affiliations footnoted. Authors should be listed according to the extent of their contribution, with the major contributor listed first. All corresponding authors (maximum 2) should be identified with an asterisk. Affiliations should contain the following core information: department, institution, city, state, postal code, and country. For contact, email address of only one corresponding author is expected within the manuscript. Please note that all authors must see and approve the final version of the manuscript before submitting.

Abstract

Articles must include an abstract containing a maximum of 200 words. The purpose of abstract is to provide sufficient information for a reader to choose either to proceed to the full text of the article. After the abstract, please give 3-8 key words; please avoid using the same words as those already used in the title.

Section Headings

Please number all section headings, subheadings and sub-subheadings. Use boldface to identify major headings (e.g. **1**, **2**, **3**, etc.) and subheadings (e.g. **1.1**, **1.2**, **2.1**, **2.2** etc.) For the sub-subheadings, please distinguish it further using non-boldface numbers in parenthesis (e.g. (1), (2), (3), etc.)

Introduction

Introduction should provide a background that gives a broad readership an overall outlook of the field and the research performed. It tackles a problem and states its important regarding with the significance of the study. Introduction can conclude with a brief statement of the aim of the work and a comment about whether that aim was achieved.

Materials and Methods

This section provides the general experimental design and methodologies used. The aim is to provide enough detail to for other investigators to fully replicate your results. It is also required to facilitate better understanding of the results obtained. Protocols and procedures for new methods must be included in detail to reproduce the experiments.

Ethics

Ethics information, including IACUC permit numbers and/or IRB name, if applicable. This information should be included in a subheading labelled "Ethics Statement" in the "Methods" section of your manuscript file, in as much detail as possible.

Results

This section can be divided into subheadings. This section focuses on the results of the experiments performed.

Discussion

This section should provide the significance of the results and identify the impact of the research in a broader context. It should not be redundant or similar to the content of the results section.

Conclusion

Please use the conclusion section for interpretation only, and not to summarize information already presented in the text or abstract.

Conflict of Interest

All authors are required to declare all activities that have the potential to be deemed as a source of competing interest in relations to their submitted manuscript. Examples of such activities could include personal or work-related relationships, events, etc. Authors who have nothing to declare are encouraged to add "No conflict of interest was reported by all authors" in this section.

Funding

Authors should declare all financial and non-financial support that have the potential to be deemed as a source of competing interest in relations to their submitted manuscript in this section. Financial supports are generally in the form of grants, royalties, consulting fees and more. Examples of non-financial support could include the following: externally-supplied equipments/biological sources, writing assistance, administrative support, contributions from non-authors etc.

Appendix

This section is optional and is for all materials (e.g. advanced technical details) that has been excluded from the main text but remain essential to readers in understanding the manuscripts. This section is not for supplementary figures. Authors are advised to refer to the section on 'Supplementary figures' for such submissions.

Text

The text of the manuscript should be in Microsoft Word or Latex. The length of the manuscript cannot be more than 50000 characters (inclusive of spaces) or approximately 7000 words.

Nomenclature for genes and proteins

This journal aims to reach researchers all over the globe. Hence, for both reviewers' and readers' ease in comprehension, authors are highly encouraged to use the appropriate gene and protein nomenclature. Authors may prefer to utilize resources such as http://www.ncbi.nlm.nih.gov/gene

Figures

Authors should include all figures into the manuscript and submit it as 1 file in the OJS system. Reference to the "Instructions for Typesetting manuscript" is strongly encouraged. Figures include photographs, scanned images, graphs, charts and schematic diagrams. Figures submitted should avoid unnecessary decorative effects (e.g. 3D graphs) as well as be minimally processed (e.g. changes in

brightness and contrast applied uniformly for the entire figure). It should also be set against a white background. Please remember to label all figures (e.g. axis etc.) and add in captions (below the figure) as required. These captions should be numbered (e.g. **Figure 1**, **Figure 2**, etc.) in boldface. All figures must have a brief title (also known as caption) that describes the entire figure without citing specific panels, followed by a legend defined as description of each panel. Please identify each panel with uppercase letters in parenthesis (e.g. A, B, C, etc.)

The preferred file formats for any separately submitted figure(s) are TIFF or JPEG. All figures should be legible in print form and of optimal resolution. Optimal resolutions preferred are 300 dots per inch for RBG coloured, 600 dots per inch for greyscale and 1200 dots per inch for line art. Although there are no file size limitation imposed, authors are highly encouraged to compress their figures to an ideal size without unduly affecting legibility and resolution of figures. This will also speed up the process of uploading in the submission system if necessary.

The Editor-in-Chief and Publisher reserve the right to request from author(s) the high-resolution files and unprocessed data and metadata files should the need arise at any point after manuscript submission for reasons such as production, evaluation or other purposes. The file name should allow for ease in identifying the associated manuscript submitted.

Tables, lists and equations

Tables, lists and equations must be submitted together with the manuscript. Likewise, lists and equations should be properly aligned and its meaning clear to readers. Tables created using Microsoft Word table function are preferred. Place each table in your manuscript file right after the paragraph in which it is first cited. Do not submit your tables in separate files. The tables should include a concise but sufficiently explanatory title at the top. Vertical lines should not be used to separate columns. Leave some extra space between the columns instead. All tables should be based on three horizontal lines to separate the caption, header and body. A few additional horizontal lines MAY be included as needed (example below). Any explanations essential to the understanding of the table should be given in footnotes at the bottom of the table. SI units should be used.

Supplementary information

This section is optional and contains all materials and figures that have been excluded from the entire manuscript. This information are relevant to the manuscript but remains non-essential to readers' understanding of the manuscript's main content. All supplementary information should be submitted as a separate file in Step 4 during submission. Please ensure the names of such files contain 'suppl. info'.

In-text citations

Reference citations in the text should be numbered consecutively in superscript square brackets. Some examples:

1. Negotiation research spans many disciplines [3, 4].
2. This result was later contradicted by Becker and Seligman [5].
3. This effect has been widely studied [1–3, 7].

Personal communications and unpublished works can only be used in the main text of the submission and are not to be placed in the Reference section. Authors are advised to limit such usage to the minimum. They should also be easily identifiable by stating the authors and year of such unpublished works or personal communications and the word 'Unpublished' in parenthesis.

E.g. (Smith J, 2000, Unpublished)

References

This section is compulsory and should be placed at the end of all manuscripts. Do not use footnotes or endnotes as a substitute for a reference list. The list of references should only include works that are cited in the text and that have been published or accepted for publication. Personal communications and unpublished works should be excluded from this section.

For references in reference list, all authors must be stated. Authors referenced are listed with their surname followed by their initials. All references should be numbered (e.g. 1. 2. 3. etc.) and sequenced according to the order it appears as an in-text citation. References should follow the following pattern: Author(s) followed by year of publication, title of publication, full journal name in italics, volume number, issue number in parenthesis, page range and lastly the DOI (if applicable). If the referred article has more than three authors, list only the first three authors and abbreviate the remaining authors to italicized 'et al.' (meaning: "and others").

Journal

Journal article (print) with one to three authors

[1] Yao Y., Xia B. Application of Phase Frequency Feature Group Delay Algorithm in Database Differential Access. Computer Simulation, 2014, 31(12): 238-241.

Journal article (print) with more than three authors

[2] Gamelin F.X., Baquet G., Berthoin S., et al. Effect of high intensity intermittent training on heart rate variability in prepubescent children. European Journal of Applied Physiology, 2009, 105: 731–738.

Journal article (online) with one to three authors

[3] Jackson D., Firtko A., Edenborough M. Personal resilience as a strategy for surviving and thriving in the face of workplace adversity: a literature review. Journal of Advanced Nursing, 2009, 60(1): 1–9,

Journal article (online) with more than three authors

[4] Hargreave M., Jensen A., Nielsen T.S.S., et al. Maternal use of fertility drugs and risk of cancer in children—A nationwide population-based cohort study in Denmark. International Journal of Cancer, 2015, 136(8): 1931–1939.

Book

Book with one to three authors

[5] Schneider Z., Whitehead D., Elliott D. Nursing and midwifery research: methods and appraisal for evidence-based practice. 3rd edn. 2009, Elsevier Australia, Marrickville, NSW.

Book with more than three authors

[6] Davis M., Charles L., Curry M.J., et al. Challenging spatial norms. 2013, Routledge, London.

Chapter or Article in Book

[7] Knowles M.S. Independent study. In Using learning contracts. 1986, Jossey-Bass, San Francisco, 89–96.

Others

Proceedings of meetings and symposiums, conference papers

[8] Chang S.S., Liaw L. and Ruppenhofer J. (eds). Proceedings of the twenty-fifth annual meeting of the Berkeley Linguistics Society, February 12–15, 1999: general session and parasession on loan word phenomena. 2000, Berkeley Linguistics Society, Berkeley.

Conference proceedings (from electronic database)

[9] Bukowski R.M. Prognostic factors for survival in metastatic renal cell carcinoma: update 2008. Innovations and challenges in renal cancer: proceedings of the third Cambridge conference. Cancer, 2009, 115 (10): 2273, viewed 19 May 2009, Academic OneFile database.

Online Document with author names

[10] Este J., Warren C., Connor L., et al. Life in the clickstream: the future of journalism, Media Entertainment and Arts Alliance, 2008. viewed 27 May 2009, http://www.alliance.org.au/documents/foj_report_final.pdf

Online Document without author name

[11] Developing an argument n.d., viewed March 30 2009, http://web.princeton.edu/sites/writing

/Writing_Center/WCWritingResources.htm

Thesis/Dissertation

[12] Gale L. The relationship between leadership and employee empowerment for successful total quality management. 2000, University of Western Sydney.

Standard

[13] Standards Australia Online. Glass in buildings: selection and installation. AS 1288–2006. 2006, SAI Global database.

Government Report

[14] National Commission of Audit. Report to the Commonwealth Government, Australian Government Publishing Service, 1996, Canberra.

Government report (online)

[15] Department of Health and Ageing. Ageing and aged care in Australia, 2008, viewed 10 November 2008, http://www.health.gov.au/internet/main/publishing.nsf/Content/ageing

No author

[16] Guide to agricultural meteorological practices. 2nd edn, Secretariat of the World Meteorological Organization, 2010, Geneva.

Note: When referencing an entry from a dictionary or an encyclopedia with no author there is no requirement to include the source in the reference list. In these cases, only cite the title and year of the source in-text. For an authored dictionary/encyclopedia, treat the source as an authored book.

Submission Preparation Checklist

As part of the submission process, authors are required to check off their submission's compliance with all of the following items, and submissions may be returned to authors that do not adhere to these guidelines.

1. The submission has not been previously published, nor is it before another journal for consideration (or an explanation has been provided in Comments to the Editor).

2. The submission file is in OpenOffice, Microsoft Word, RTF, or WordPerfect document file format.

3. Where available, URLs for the references have been provided.

4. The text is single-spaced; uses a 12-point font; employs italics, rather than underlining (except with URL addresses); and all illustrations, figures, and tables are placed within the text at the appropriate points, rather than at the end.

5. The text adheres to the stylistic and bibliographic requirements outlined in the Author Guidelines, which is found in About the Journal.

6. If submitting to a peer-reviewed section of the journal, the instructions in Ensuring a Blind Review have been followed.

Integrated Services Platform of International Scientific Cooperation

Innoscience Research (Malaysia), which is global market oriented, was founded in 2016.Innoscience Research focuses on services based on scientific research. By cooperating with universities and scientific institutes all over the world, it performs medical researches to benefit human beings and promotes the interdisciplinary and international exchanges among researchers.

Innoscience Research covers biology, chemistry, physics and many other disciplines. It mainly focuses on the improvement of human health. It aims to promote the cooperation, exploration and exchange among researchers from different countries. By establishing platforms, Innoscience integrates the demands from different fields to realize the combination of clinical research and basic research and to accelerate and deepen the international scientific cooperation.

Cooperation Mode

Clinical Workers

In-service Doctors

Foreign Researchers

Hospital

University

Scientific institutions

BIQ-BYWORD
SCIENTIFIC PUBLISHING PTY LTD

OUR JOURNALS

The *Journal of Architectural Research and Development* is an international peer-reviewed and open access journal which is devoted to establish a bridge between theory and practice in the fields of architectural and design research, urban planning and built environment research.

Topics covered but not limited to:

- Architectural design
- Architectural technology, including new technologies and energy saving technologies
- Architectural practice
- Urban planning
- Impacts of architecture on environment

Journal of Clinical and Nursing Research (JCNR) is an international, peer reviewed and open access journal that seeks to promote the development and exchange of knowledge which is directly relevant to all clinical and nursing research and practice. Articles which explore the meaning, prevention, treatment, outcome and impact of a high standard clinical and nursing practice and discipline are encouraged to be submitted as original article, review, case report, short communication and letters.

Topics covered by not limited to:

- Development of clinical and nursing research, evaluation, evidence-based practice and scientific enquiry
- Patients and family experiences of health care
- Clinical and nursing research to enhance patient safety and reduce harm to patients
- Ethics
- Clinical and Nursing history
- Medicine

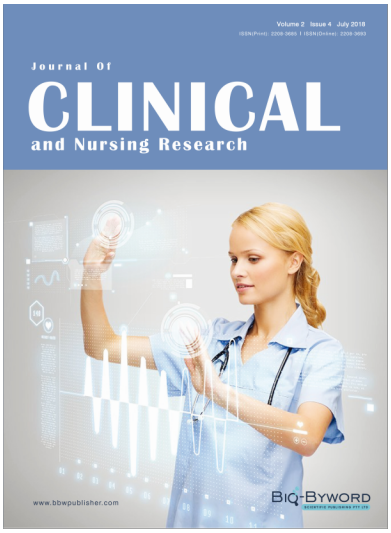

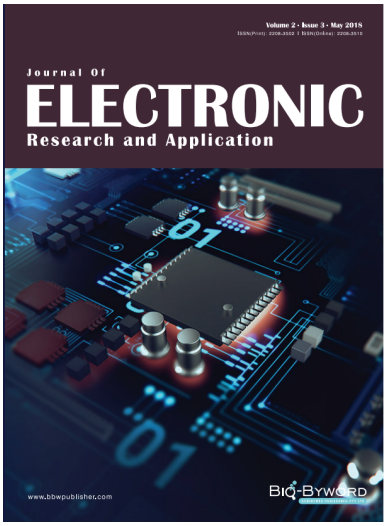

Journal of Electronic Research and Application is an international, peer-reviewed and open access journal which publishes original articles, reviews, short communications, case studies and letters in the field of electronic research and application.

Topics covered but not limited to:

- Automation
- Circuit Analysis and Application
- Electric and Electronic Measurement Systems
- Electrical Engineering
- Electronic Materials
- Electronics and Communications Engineering
- Power Systems and Power Electronics
- Signal Processing
- Telecommunications Engineering
- Wireless and Mobile Communication