Journal of Contemporary Educational Research

Editor-in-Chief

Jandhyala B. G. Tilak

Council for Social Development, New Delhi

BIO-BYWORD SCIENTIFIC PUBLISHING PTY LTD
(619 649 400)
Level 10
50 Clarence Street
SYDNEY NSW 2000
Copyright © 2022. Bio-Byword Scientific Publishing Pty Ltd.
Complimentary Copy

ISSN (ONLINE): 2208-8474
ISSN (PRINT): 2208-8466

Journal of Contemporary Educational Research

Focus and Scope

Journal of Contemporary Educational Research is an international, peer-reviewed and open access journal which is to promote the evaluative, integrative, theoretical and methodological research on contemporary education; shape a novel, broader view of issues in contemporary education; enhance the caliber of humanities research through active use of best domestic and foreign practices; and integrate the achievements of various sciences and knowledge areas with unconventional approaches.

All relevant papers are carefully considered, vetted by a distinguished team of international experts, and rapidly published. Original articles, short communications, case studies and comprehensive review articles can be submitted online via the journal's submission and peer review site.

About Publisher

Bio-Byword Scientific Publishing is a fast-growing, peer-reviewed and open access journal publisher, which is located in Sydney, Australia. As a dependable and credible corporation, it promotes and serves a broad range of subject areas for the benefit of humanity. By informing and educating a global community of scholars, practitioners, researchers and students, it endeavors to be the world's leading independent academic and professional publisher. To realize it, it keeps creative and innovative to meet the range of the authors' needs and publish the best of their work.

By cooperating with University of Sydney, University of New South Wales and other world-famous universities, Bio-Byword Scientific Publishing has established a huge publishing system based on hundreds of academic programs, and with a variety of journals in the subjects of medicine, construction, education and electronics.

Publisher Headquarter

BIO-BYWORD SCIENTIFIC PUBLISHING PTY LTD
Level 10
50 Clarence Street
Sydney NSW 2000
Website: www.bbwpublisher.com
Email: info@bbwpublisher.com

December 2022, Volume 6 Issue 12

Table of Contents

1 **Research on the School-Enterprise Cooperation Training Mode for Music Professionals in University**
Jia Zhu, Hang Xu

9 **Enhancing the Problem-Solving Skills of Vocational Students Through Skills Competition**
Shang Wang, Fei Peng, Mengjie Li

16 **Reflections on the Construction of the Key Elements of Vocational Education and Training System**
Zhixin Feng, Shang Wang, Xueyi Zheng

23 **Generative Mechanisms of Classroom Silence and the Path of Avoidance**
Minmin Xie, Huanhuan Luo, Wenhao Yao

30 **Research on the Carbon Peak and Carbon Neutralization Model in Colleges and Universities: Taking China University of Geosciences (Beijing) as an Example**
Huiping Han

38 **Art and Life of Manchu Paper-Cut Artist Ni Youzhi**
Lin Tong

Call for papers – Journal of Contemporary Educational Research

ISSN (Online): 2208-8474
ISSN (Print): 2208-8466

Submission open for January - 2023

Dear Researchers,

Journal of Contemporary Educational Research is an international, peer-reviewed and open access journal which is to promote the evaluative, integrative, theoretical and methodological research on contemporary education; shape a novel, broader view of issues in contemporary education; enhance the caliber of humanities research through active use of best domestic and foreign practices; and integrate the achievements of various sciences and knowledge areas with unconventional approaches.

All relevant papers are carefully considered, vetted by a distinguished team of international experts, and rapidly published. Original articles, short communications, case studies and comprehensive review articles can be submitted online via the journal's submission and peer review site.

The *Journal of Contemporary Educational Research* is published by Bio-Byword Scientific Publishing Company, it is a fast growing peer-reviewed and open access journal publisher, which is located in Sydney, Australia. As a dependable and credible corporation, it promotes and serves a broad range of subject areas such as medicine, construction, education and electronics for the benefit of humanity. By informing and educating a global community of scholars, practitioners, researchers and students, it endeavour's to be the world's leading independent academic and professional publisher.

All Bio-Byword journals are free from all access barriers, allowing for the widest possible global dissemination of their manuscripts and highest possible citations. Bio-Byword publisher online submission will go through a rapid peer review and production, making the process of publishing simpler and more efficient, which benefit from its user friendly online submission system that reduces the overall time from submission to publication.

Acceptance Notification: Within 21 days from the date of manuscript submission

Send your manuscript to the editor at: **info@bbwpublisher.com**

With Warm Regards,
Editor-in-Chief
Prof. Jandhyala B. G. Tilak
Journal of Contemporary Educational Research

Journal of Contemporary Educational Research, 2022, Volume 6, Issue 12
http://ojs.bbwpublisher.com/index.php/JCER
ISSN Online: 2208-8474
ISSN Print: 2208-8466

Research on the School-Enterprise Cooperation Training Mode for Music Professionals in University

Jia Zhu[1,2], Hang Xu[3]*

[1]College of Art, Hainan Tropical Ocean University, Sanya 572022, Hainan Province, China

[2]Department of Culture and Arts, Hoseo University, Asan 48498, Chungcheongnam-do, Korea

[3]College of Music, Baekseok University, Seoul 31187, Chungcheongnam-do, Korea

***Corresponding author:** Hang Xu, hangxu1995@163.com

Copyright: © 2022 Author(s). This is an open-access article distributed under the terms of the Creative Commons Attribution License (CC BY 4.0), permitting distribution and reproduction in any medium, provided the original work is cited.

Abstract: In order to meet the needs of enterprises, adapt to the development of the social era, and cultivate practical talents in line with the market, adopting and promoting the school-enterprise cooperation mode have become important reform measures of higher education for music professionals in universities. In the context of the continuous optimization and development of national higher education, clarifying the significance of deepening the reform, exploring the drawbacks of the current mode and the areas that can be developed, seeking an effective way to combine music education with social needs, tapping the unlimited potential of professionals, and guiding the training of professionals are all constructive guarantees for ensuring sufficient national human resources in the future.

Keywords: School-enterprise cooperation; Talent training; Music

Online publication: December 8, 2022

1. Introduction

The directional process of professional education affects the strategic development of the country. The deepening of education reform and the improvement of comprehensive practical quality in the new era are the only ways to meet people's satisfaction with education and the modernization of education. In the current market, the development of higher education is complex and diversified, and basic professional education can no longer meet the needs of social development [1]. There is a certain difference between the direction of market demand and that of talent training in universities. Therefore, eliminating the differences and solving the disconnection have become urgent issues to be addressed in the professional development of universities. Whether from the perspective of government, schools, or students and teachers, corresponding measures should be taken to ensure that effective results can be achieved in the actual market [2]. In the context of the current market situation, and considering our own education experience, this paper puts forward several suggestions and recommendations for the effective adoption of the school-enterprise cooperation mode and the in-depth reform of music majors in universities, so as to ensure the balance between supply and demand of talents and create a good market environment.

2. Significance of school-enterprise cooperation in the training of music professionals in university

2.1. Standardize professional curriculum

Setting up targeted and innovative professional courses is an important part of teaching organization activities in university and has a significant impact on the direction of talent quality training. Therefore, considering the market demand, the development of the times, and the current situation of students, establishing a correct teaching concept, and standardizing the development of professional courses are urgent measures that must be taken. At present, the courses covered by music majors in universities include professional basic courses, professional elective courses, public courses, and internship courses, which usually last one semester [3]. Except for practical courses, the rest are often completed on campus. In recent years, practical courses have been affected by the COVID-19 pandemic, and they have been discounted greatly, changed to online work, or carried out carelessly. Whether it is the management department of the industrial market or the employer of art-oriented companies, they have always been truly in sync with the students. The inability of students' comprehensive ability to meet the market requirements and the company culture and environment to penetrate the student body ultimately leads to the inability to improve employment rates. The curriculum design of music majors in universities must be integrated with the actual needs of the times. Whether it is the development of the overall environment or market prospect analysis, it affects the employment direction and success rate of students. Therefore, it is imperative to strengthen the cooperation between schools and enterprises, adjust the talent training plan in time, standardize and optimize the teaching content and methods, and enhance the practical application skills of music major students in terms of professional stage display or backstage settings [4].

In a real sense, it would be beneficial to promote the vitality of the art and culture market so as to achieve a win-win situation between talents and the market.

2.2. Comprehensively build a team of teachers with dual qualifications and abilities

The hope of revitalizing the nation lies in education, while the hope of revitalizing education lies in teachers. It is an important matter for universities to build a team of teachers with excellent education ability and ethics, profound professional theory, and solid practical ability, as well as form a reasonable teacher distribution structure. With the rapid high-tech development in the society and the increasing technical content in the posts for applied talents, mere talk can no longer fully meet the needs of social development. Regularly sending teachers to participate in the frontline work of enterprises for practical learning, training, and research not only enables them to have a practical and comprehensive grasp of the current development status and business model of the social market, but also directs their teaching plans and objectives, optimizes the teaching methods, and strengthens the teaching results with the latest dynamic guidelines in the industry [5]. The interaction between teachers and staff and the exchange between schools and enterprises have formed an effective mechanism for schools, industries, and enterprises to cultivate teachers in a joint manner. Professional guidance for students with personal experience and work experiments has not only helped students better understand the market needs of enterprises, but also improved the comprehensive ability of teachers in all aspects, playing a decisive role in building a team of teachers with dual qualifications in an all-round way. Generally, professional music teachers with dual qualifications must have a clear understanding of the training goal of music education in universities. This would help promote the music industry. In order to achieve the optimization of teaching effects, professional teachers with strong skills should make a biased approach to the teaching content and direction [6]. The construction of this team would increase the teaching and research achievements of teachers and enhance their practical experience with each passing day, so as to promote the all-round development of music majors in universities.

2.3. Create application-oriented talents

Music education in universities undertakes the function of promoting and activating the economic and cultural development of the local and even the country. The pursuit of cultural literacy by the people and the promotion and development of the country's soft power necessitate music majors in universities to pursue the purpose of achieving good literacy in this discipline, noble humanistic feelings, and unremitting exploration spirit [7]. University students should inject new vitality and incorporate certain cultures, including professionalism and strict quality control, into their working environment. It has been pointed out in the Outline of the National Education Reform Plan that the training standards used to attach importance to the professional, complex, and applied talent model, which is dedicated to training and bringing up specialized talents with good music literacy and teaching ability to meet the needs of national economic construction and education reform and development in the new era as well as a clear direction of the development of music majors in universities. By reforming and developing the existing teaching mode, improving the talent training mode, strengthening the talent requirements of the market, and improving the cultivation of students' comprehensive practical ability through learning, the training for university students is no longer just about helping them master the basic theory of music and professional skills systematically, but also helping them use the knowledge learned to analyze, solve practical problems, and adapt to the market, which has become the most important direction of talent training. In the training process of application-oriented talents, we must consider the local social development level, local cultural characteristics, and economic development needs as well as pay attention to the comprehensive development of students. Application-oriented talents who can perform, understand operations, innovate, and excel in planning would promote the sustainable development of social music functions.

3. Status quo of school-enterprise cooperation in the cultivation of music professionals in university

Based on **Figure 1**, it can be seen that the employment situation of music majors in universities across the country over the past five years has not been optimistic. In recent years, influenced by the environment, the nature of music profession, which requires offline and practical work, has been greatly affected. The practicality of music is more than theory itself. Knowledge-based practical talents are needed regardless of the employment direction, be it in schools or enterprises, and the market. Over the years, universities have focused on improving students' innovation and art appreciation ability, which is understandable. However, in real working environment, practical ability is a prerequisite. In the market, where employment opportunities have declined in recent years, the ability of compound applied talents must be sustained. The factors that have led to this situation are raised in this section.

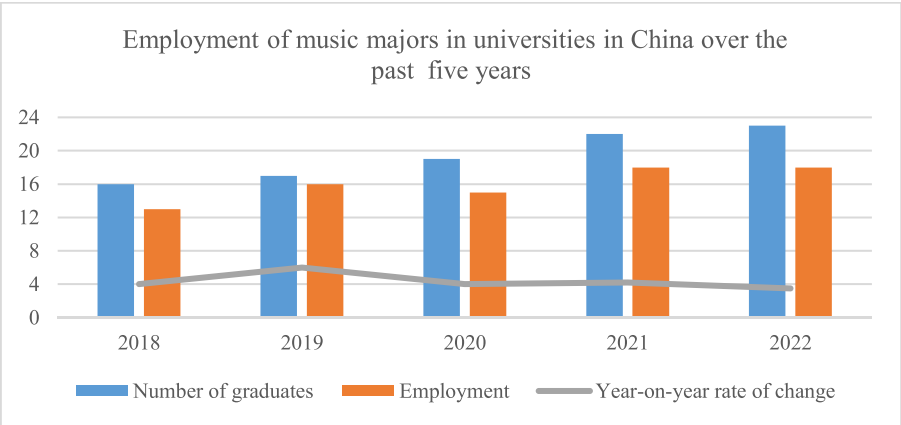

Figure 1. Employment of music majors in universities in China over the past five years

3.1. The concept of educational cooperation lags behind

Music majors in universities are still in the stage of theory-driven practice. After the implementation of the new curriculum reform, the emphasis on practical requirements has affected the teaching objectives and syllabus. However, the theory-based system has been formed for a long time, which has made both the school and students accustomed to "talking on paper." The students still do not have a clear idea about the direction of practice, and there is little experience in translating theory into practice. At the same time, due to the rigidity of course content explanation and course arrangement, students' acceptance of new information about the major lags behind. Due to the impact of COVID-19 in recent years, face-to-face teaching has reduced, while online teaching has been widely adopted; thus, professional technological innovation cannot be conveyed to students in time, which further reduces the feasibility of practice. Although the school-enterprise cooperation mode has been implemented in some universities, it has certain disadvantages. Enterprises lack experience in managing students, while schools lack practical experience in guiding students. The goals pursued by both sides are also different. Enterprises pursue cooperation in this form to reduce labor costs and company expenditure, so as to obtain cheap labor. Schools, on the other hand, are more than willing to push students into enterprises. There is no clear practice management mechanism that meets the requirements of professional talent training programs. The goal of cooperation is a win-win situation for both schools and enterprises, requiring both parties to innovate new cooperation concepts and modes.

3.2. Weak policy support

The current school-enterprise cooperation mode reflects an independent connection between schools and enterprises. Since there is less participation from the government, there is a lack of support in terms of relevant laws, regulations, and policies; additionally, relevant rewards cannot be obtained. Compared with other industries, the art industry in China encompasses small and medium-sized enterprises except the national leading art troupes [8]. The development situation of these small and medium-sized enterprises is not very optimistic. Under the influence of the environment, its strength for development is limited. If school-enterprise cooperation is implemented, it is difficult for small and medium-sized professional art enterprises to achieve high frequency and efficient school-enterprise cooperation without policy support, thus threatening the realization of more talent positions and project activities. On the other hand, the cooperation between schools and many small and medium-sized enterprises is risky and difficult to manage in an orderly manner. Not only is it limited by the setting of talent training objectives, but it also affects the selection of training modes. There should be tripartite relationship among schools, enterprises, and the government, in order to form an appropriate and effective school-enterprise cooperation along with adequate government policy support. With the school as the center, we should cultivate appropriate talent training programs and should strengthen students' professional theory and practical ability. With enterprises as the supplement and government policies as the guarantee, we should coordinate personnel mobilization and operation in accordance with the equipment, platform, and capital needs of the school as well as give play to its subjective initiative, so as to carry out high-level school-enterprise cooperation.

3.3. Incomplete operation mechanism

Most of the current operating mechanisms of school-enterprise cooperation are flawed. The all-round implementation of talent training under school-enterprise cooperation requires the establishment of a professional construction steering committee, a practical training committee, and a supervision committee. Schools formulate teaching objectives and plans for relevant majors according to the professional direction of the market demand provided by enterprises, while enterprises provide practice bases and practical activities as well as classifies talent posts according to the needs of the market. The relationship and support

between schools and the market is a two-way win-win situation with scientific teaching and training direction and good market economy orientation. The construction steering committee comprises a team of professional backbone teachers, senior- and middle-level representative leaders of enterprises, and professional and technical personnel. The function of this committee is to revise professional education knowledge in a timely manner according to market demand and changes, develop relevant courses and activities in a reasonable manner, as well as provide correct operation direction for the cooperation between schools and enterprises. The training work committee, on the other hand, comprises the person in charge of the school's training department and the enterprise's human resources management personnel. The committee mainly defines the post requirements and the number of students according to the market demand as well as formulates relevant training courses. The purpose of the supervision work committee is to realize the two-way restriction and supervision on the system and morality of both schools and enterprises. Both parties need to sign a school-enterprise cooperation agreement with legal effect under the legal framework; define the rights, obligations, and responsibilities of each department; respect the cultures and systems of all parties; strengthen the education of moral and safety, as well as strive to achieve an efficient win-win situation in the cooperation between schools and enterprises.

4. Effective strategies for school-enterprise cooperation in the training of music professionals in university

4.1. Construction and implementation of the practical teaching mode

The reform of the practical teaching mode needs to be based on current market research, meet the requirements of schools to provide talent resources that meet the demands of enterprises, and achieve complete matching. In the cooperation between schools and enterprises, it is necessary to take into account the characteristic development of the specialty, so as to achieve corresponding employment and information sharing. Experiential teaching is deeply implemented in practice. Through teachers' and students' participation, creative practical activities, as well as purposeful company-life experience, it is possible to gain knowledge, develop skills, and improve one's ability. Practical teaching enables students to carry out in-depth research around specific issues through practice, including basic skills and theoretical understanding of the major, while increasing immersion and participatory experience as well as actively exploring behavioral experiments, so that students can concretize abstract concepts and complete the deep integration of knowledge, feelings, intentions, and behaviors following a specific experience. The exchange and sharing of information between schools and enterprises should be done in real time. Middle- and senior-level leaders of enterprises should also participate in the formulation of professional talent training programs that are carried out in schools and provide suggestions that are consistent with the market development, so that the teaching content is relatable to the corporate culture market research requirements of enterprises. The scientific management system, staff quality standards, industry service requirements, and technological innovation concept of enterprises should be timely integrated into the training programs for professional talents. With school leaders and teachers as leaders, we should fully seize this opportunity to find a breakthrough in talent training, expand our thinking, and seek deeper cooperation and development. In addition, the practical teaching mode not only brings about changes in the teaching policy, but also enables university students to learn critical reflection and self-examination through experiential learning. By participating in this experiment and practice, students are given the opportunity to reflect on their understanding and grasp of professional subject knowledge, thus cultivating a higher critical thinking ability. Similarly, in practical teaching, learners are required to take the lead early in the immersion experience, analyze and think about the entire practice process, as well as follow through their own mental improvement and knowledge internalization. The construction and implementation of this teaching mode is based on the student-centered approach and the close relationship between schools and enterprises as the impetus for

stimulating students' ability to the greatest extent and actualizing the effective link between talents in schools and the social market.

4.2. Integrate professional education and strengthen mutual assistance and cooperation

The training of schools and the needs of enterprises go in both directions. Based on the existing situation, taking the strengths of the major, the professional concentration of talents, the future development direction of enterprises, and the mainstream influence of the market culture would help create a new talent training direction. Invite senior teachers with strong professional ability from schools and product managers with excellent ability and market sense from enterprises to participate may be beneficial. Senior teachers should be encouraged to participate in enterprise activities, join the enterprise workforce, understand the enterprise culture, accumulate practical work experience in specific frontline work, identify the talent requirements of the market from the perspective of marketing, and adjust the existing teaching policy and direction in a timely manner. Through this feedback, schools will be able to formulate specific academic evaluation systems by referring to the work experience of the teachers and the current standards set by enterprises for employees. In terms of curriculum design and teaching guidance, schools should pay attention to the close connection with corporate culture, address the shortcomings of students and the areas that can be improved, as well as encourage students to combine abstract art and corporate culture in their learning, making it specific and promoting efficient links between enterprises and schools. On the other hand, middle- and senior-level managers in enterprises should consider organizing seminars from time to time for the sake of keeping close contact with school leaders and teachers in real time to discuss current developments and enable students to gauge the current situation in the social market, thus preparing them and building their resilience. The employment guidance committee, which is made up of university leaders, middle- and senior-level leaders of enterprises, and student leaders, not only grasps the direction of professional construction, but also delivers high-quality application-oriented talents to enterprises in a timely manner and solves employment issues for both schools and students. Whether it is the scarce editing and directing major, basic music education, or highly professional music performance major, they should be familiar with the integration of industry with education, rely on each other, and develop together. The ultimate goal is to highlight the characteristics of music majors in universities and balance the supply and demand as well as the benign development cycle of the social market.

4.3. Effective and innovative talent training based on local characteristics

There is interaction between characteristics and innovation. Whether it is cross-regional school-enterprise cooperation or not, school-enterprise cooperation is based on local characteristics. For enterprises with different characteristics, the purpose of school-enterprise cooperation is to cultivate application-oriented composite talents that meet the social needs. The cultivation of talents in universities is based on the university's situation and the local characteristics, with the development characteristics as the premise and the development goals as the guidelines. Only with the "new" development path can we truly cultivate innovative talents who are suitable for the society. Therefore, in the talent training process, colleges and universities should adjust their development direction in accordance with the needs of their partners and narrow the talent gap, so that the trained talents can meet the needs of enterprises and realize the turnover of employment rate while improving the working efficiency of enterprises. With the continuous change in the economy and market direction, only those enterprises that are standing on the cusp of the storm understand the needs of the society and base themselves on the local development characteristics. Instead of replacing the old, they should give full play to the existing advantages, learn from each other, complete the transformation of the new system, and form a perfect closed loop for new talents. First of all, taking the school as the base and teachers with dual qualifications as leaders, it is possible to jointly carry out practical

training production, teaching, and research activities based on the existing cultural characteristics through training base platforms. Secondly, in order to carry out characteristic cultural activities, we should not only offer characteristic cultural courses, such as "Introduction to Hainan Li Minority Music" and "Research on South Liaoning Characteristic Instrumental Music," but also add relevant characteristic activities in practical teaching following the integration of local characteristic resources to build an education system that combines knowledge with practice. Last but not least, we should take various measures to guide students gain knowledge in classroom, learn methods through practical activities, and gain experience through enterprise work. In particular, we should rely on local cultural resources to carry out extracurricular activities, innovation, and entrepreneurship education, so as to create a situation where scientific research ability and entrepreneurship level go hand in hand. We should also go deeper into grassroots practice, carry out research and strengthen local cultural resources with first-hand information, connect with schools and enterprises, improve industrial and employment needs, and continuously optimize the talent training in schools.

4.4. Scientific establishment of a reasonable guarantee mechanism

Establishing a scientific and reasonable two-way incentive and restraint mechanism is a stable measure that ensures the long-term healthy development of school-enterprise cooperation. Teachers and employees should be evaluated based on facts. Carrying out regular evaluations is conducive to both parties fulfilling their responsibilities and obligations. Teachers who participate in this guarantee mechanism must be part of a backbone team, which is composed of teachers with dual qualifications. The entire strategic strategy can be adjusted from a commanding height only if teachers possess solid professional theoretical knowledge and a high teaching level. Similarly, for enterprises, excellent employee representatives and middle- and senior-level leaders with vision for growth should be selected to enhance the evaluation system from different perspectives. Students who participate in enterprise activities through experiential teaching, such as cultural salons and programs, should be given material rewards based on the workload and artistic practice achievements. In particular, staff with rich marketing experience should be hired to be guest guidance experts and to issue honorary certificates. This two-way incentive mechanism not only mobilizes the enthusiasm of students and teachers who would directly benefit from it, but also allows them to grasp cutting-edge market information in a timely manner, while directly and effectively improving the talent training direction. On the other hand, with the supervision and support of the government, the whole model is bound to be accomplished smoothly and scientifically. However, a bottleneck period exists in the process of cooperation. The government should build a bridge between both parties, develop platforms for cooperation, reduce the social pressure of education moving into enterprise, and eliminate the barriers of enterprise culture permeating the school. The government should also establish relevant industry associations, coordinate the tripartite relationship, and build development platforms; not only offline ones, but also online platforms such as information-sharing websites to promote interaction and exchange. We should develop a high-quality project, establish a quality assurance team, which will be led and supervised by the government, improve the training of teachers, strengthen the construction of training bases, supervise the development of courses, promote employment guidance, and form a scientific diversified security mechanism to cultivate application-oriented music professionals who can meet the development needs of the market.

5. Conclusion

The current trend of the employment market requires the realization of a two-way and efficient school-enterprise cooperation as well as the pursuit of high-quality personnel training. Under the guidance of socialist core values, the cultivation of educational talents has put forward new requirements for

comprehensive and in-depth reform and development. Freedom and democracy, emancipation and development, keeping pace with the times, building a new and stable school-enterprise cooperation and exchange platform under the new situation, using high-quality resources to learn from each other, improving and optimizing the teaching plan, enhancing the value of school-enterprise cooperation mode, improving the security and operation mechanism, cultivating and sharing application-oriented talents who are suitable for the growth of the social market, and forming an effective virtuous circle are all applicable constructive measures and guarantees for the development of the national art and culture market.

Funding

This research was financially supported by the project supported by the Education Department of Hainan Province (Project number: Hnjg2020-96), the 2021 Education and Teaching Reform Project of Hainan Tropical Ocean University (No. RHYjg2021-07); and the 2019 Education and Teaching Reform Project of Hainan Tropical Ocean University (No. RHYJG2019-20).

Disclosure statement

The authors declare no conflict of interest.

References

[1] Hu R, 2019, Exploration on the Training Mode of Applied Talents in Art Colleges. Journal of Higher Education, 2019(09): 151–152.

[2] Zhu J, 2020, Research and Practice on the Talent Training Model of School-Enterprise Cooperation for Music Performance Major in University. Advances in Social Science, Education and Humanities Research (ASSEHR), 516: 511–515.

[3] Su X, 2020, A Practical Study on the Reform of the Talent Training Mode of "School Enterprise Cooperation and Work study Combination". China Management Informationization, 2020(04): 217–219.

[4] Liang Y, 2019, Research on the School Enterprise Cooperation Mode of Music Major Based on the Cultivation of Application-Oriented Talents. Home Drama, 2019(16): 176.

[5] Zhu J, 2020, Reform of Piano Basic Course Teaching for College Music Performance Major – Research on the Application of Flipped Classroom in Teaching. Scholar Highlights in Education Research, 1: 693–699.

[6] Chen Y, 2019, Exploration on School-local Cooperation in the Training Model of Applied Music Professional Talents in Local Universities. Journal of Hubei Open Vocational College, 2019(14): 30–31.

[7] Zhu J, 2017, Proceedings of the 2017 International Conference on Education Innovation and Economic Management (EIEM 2017), September 15–16, 2017: Research on the Practice of Talent Cultivation of Applied Undergraduate Music Performance Based on School-Enterprise Cooperation. DEStech Publications, Beijing, China, 43–47.

[8] Zhu J, 2017, Research on the School-Enterprise Cooperation and the Training of Applied Talents in Music Performance of Applied Marine University. Advances in Economics, Business and Management Research, 50: 16–19.

Publisher's note

Bio-Byword Scientific Publishing remains neutral with regard to jurisdictional claims in published maps and institutional affiliations.

Journal of Contemporary Educational Research, 2022, Volume 6, Issue 12
http://ojs.bbwpublisher.com/index.php/JCER
ISSN Online: 2208-8474
ISSN Print: 2208-8466

Enhancing the Problem-Solving Skills of Vocational Students Through Skills Competition

Shang Wang[1]*, Fei Peng[1], Mengjie Li[2]

[1]School of Automotive Engineering, Beijing Polytechnic, Beijing 100176, China

[2]School of Art & Design, Beijing Polytechnic, Beijing 100176, China

Corresponding author: Shang Wang, wangshang@bpi.edu.cn

Copyright: © 2022 Author(s). This is an open-access article distributed under the terms of the Creative Commons Attribution License (CC BY 4.0), permitting distribution and reproduction in any medium, provided the original work is cited.

Abstract: Unlike general education, vocational education aims to nurture skilled people for various sectors in the society. The development of students' problem analysis and problem-solving skills is crucial. As an important part of the vocational education system, skills competitions are considered a "booster" for improving the quality of teaching in vocational institutions. This paper examines the problem-solving skills of students in preparation for skills competition. First of all, we introduce China's education policies and conduct a review of early scholars' views, followed by a discussion on the specific problems faced in the design of the entry for skills competition and an exploration of the process of enhancing students' problem-solving skills around these problems; we then propose several suggestions for vocational institutions to enhance their participation in skills competitions. Skills competitions provide a "special stage" for students in vocational institutions to show their abilities. The question of how this "stage" can be utilized to better improve students' abilities is worth exploring in different fields.

Keywords: Skills competition; Problem-solving skills; Vocational students; Vocational colleges

Online publication: December 8, 2022

1. Introduction

Vocational education and general education are positioned differently, but they have equal importance. Vocational education is positioned to nurture skilled and application-oriented talents for various industries in the society. As the pace of industrial upgrading and economic restructuring continues to accelerate, the demand for skilled personnel by various existing industries is increasing; additionally, the status and role of vocational education is becoming more prominent [1].

At present, there are several shortcomings in the method of training vocational education talents, and a gap exists between graduates and the job requirements set by enterprises. Companies value practical skills and require their employees to be able to solve problems in the production line. The main teaching method used by vocational institutions is the traditional classroom lecture method, which poses a challenge to the development of students' problem-solving skills. As an important part of vocational education, skills competitions can promote the internal development of vocational institutions. As an important supplement to traditional classroom, it is a strong impetus for the reform and innovation of the talent training model. Taking the Mechanical Innovation Skills Competition as an example, students, under the guidance of their instructors, are required to design and manufacture products on their own. Whether in the design and manufacturing process or the product optimization process, students will inevitably encounter problems.

In April 2022, the Chinese government introduced the "Law on Vocational Education," which emphasizes the role of skills competitions in vocational education. The document states that vocational institutions should provide a platform for technical skilled personnel to showcase their skills and compete with each other and continue to train more high-quality skilled talents through skills competitions [2,3].

2. Literature review

What is the role of skills competitions in promoting vocational education? Early scholars have carried out research work in different fields. American scholar Liu [4] argue that participating in skills competitions is a win-win situation for both students and teachers. He believes that teachers would be able to improve their professional competence, and thus the quality of teaching, while students can consolidate and improve their professional skills and enhance their overall quality. In a study, Japanese scholar Wan [5] used big data to investigate the intrinsic relationship between vocational skills. His findings have provided a theoretical basis for other vocational skills research fields, including vocational skill training, vocational skill mining, and vocational skill identification. Wu [6] has conducted an in-depth analysis of the problems in digital education and suggested the addition of a simulation operation competition module within the operating system, where students would play games (compete with each other) to complete learning tasks, thus improving the quality of teaching and learning. German scholar Green [7] has reformed the curriculum based on the core skills theory. He has discovered that highlighting core skills in teaching enhances the integration of academic and vocational learning through teaching experiments. Zheng [8] explained the importance of cultivating applied senior talents from the perspective of the rapid development of the sports market and analyzed the relationship between vocational skills competitions and the cultivation of applied talents. She designed a new system for cultivating applied talents based on skills competition, thus providing a reference for cultivating applied talents in sports economy management. Li [9] analyzed the importance of the "tiered ladder" training mechanism in the context of vocational skills competition, taking secondary-level electronics students as the research subject. Maia [10], a British scholar, believes that skills competitions can improve the attractiveness of vocational education. He conducted 110 interviews with contestants from a skills competition. Based on these data, he analyzed the potential contribution of skills competitions to revitalizing British vocational education. In a study, Lv [11] analyzed the methods and ideas of industrial product innovation practice based on a case of "industrial product digital design" in a senior vocational skills competition. He believes that skills competition is important for curriculum reform and students' innovation ability development.

3. Research logic

The previous section discusses the views of scholars, in which they all agree that skills competitions are important and contribute to the enhancement of students' abilities. However, there are only a few literary works on the analysis of typical cases. This study analyzes the role of skills competitions in promoting students' problem-solving skills through their participation in the "Internet +" College Student Innovation and Entrepreneurship Competition. The research logic is shown in **Figure 1**.

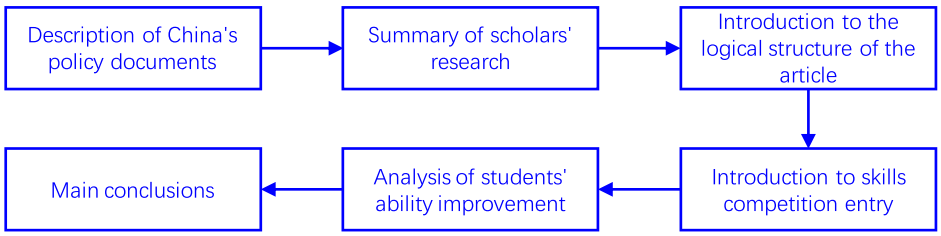

Figure 1. Research logic diagram

First, the Chinese government's education policy is described in this paper. Second, the perspectives of scholars are reviewed. Third, the skills competition entry is presented, along with the problems faced by students. Fourth, the ability improvement process of the students is analyzed with regard to the four problems addressed. Suggestions are then made for vocational institutions to increase their participation in skills competitions.

4. Skills competition entry

Five students from Beijing Polytechnic formed a team and participated in the "Internet +" College Student Innovation and Entrepreneurship Competition. Under the guidance of the research team, the participating team preliminarily formed the "Unmanned Disaster Rescue Vehicle" (**Figure 2**) as an entry. The application scenario of the entry is as follows: at the disaster scene, the unmanned rescue vehicle enters the hazardous area to transport emergency rescue materials (such as medicines and rescue equipment).

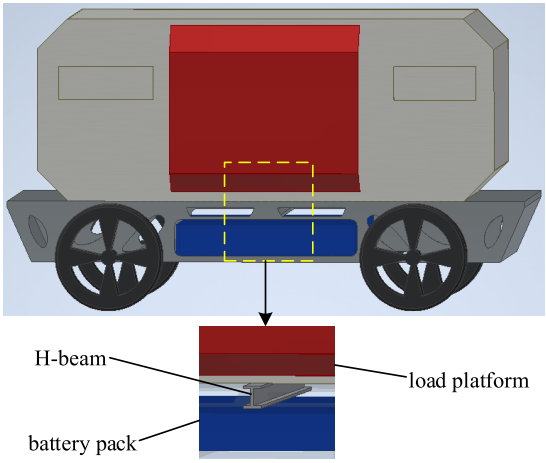

Figure 2. Structure of the skills competition entry

It can be seen from the application scenario that the load capacity of the rescue vehicle is an important parameter. As shown in **Figure 2**, the upper part of the rescue vehicle is a load platform, and below the load platform is a battery pack. The load platform is separated from the battery pack by a load-bearing steel beam. Obviously, an overweight load will cause severe bending deformation of the beam, pressing the battery pack and causing an accident. The students' creativity is evident from their work. However, many factors need to be considered to complete the design and the production. The key, yet difficult aspect, of the design is the safety of the work.

5. Promoting effect and analysis

5.1. Solving the problem of untestable situation

In order to ensure the reliability of the entry, the students wanted to carry out a three-point bending mechanical experiment to test the bending resistance of the H-shaped steel beam (as shown in **Figure 2**). However, the school did not have the corresponding mechanical experimental equipment or cutting device to cut the H-beam according to the sample size requirements of the three-point bending test equipment. Therefore, the idea of conducting the experiment could not be realized. In order to improve the safety and stability of the entry, it is necessary to test the mechanical properties of the beam. How then to solve the problem of not being able to conduct experiments? The students had to think of a solution. After searching from various books to look for a solution, they proposed a solution, whereby simulation would be used to simulate the deformation. This solution was approved by the instructors. The research team introduced the basic theory and related software of finite element to the participating team. In order to establish a more

accurate model for bending performance simulation, a geometric model must be established.

5.2. Solving the problem of establishing a geometric model

In order to exercise the students' problem analysis and drawing abilities, the task of establishing a geometric model was assigned to the students by the research team. The students looked up various relevant materials during their spare time and came up with specific dimensions for the beam. Subsequently, they drew a geometric model diagram, as shown in **Figures 3** and **4** (the diagrams were drawn by the students). The geometric models drawn by the students were approved by the instructors. On this basis, the finite element model was built and computed on the server.

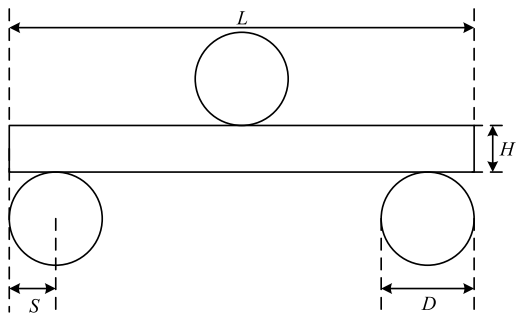

Figure 3. Geometric model of the H-beam bending test

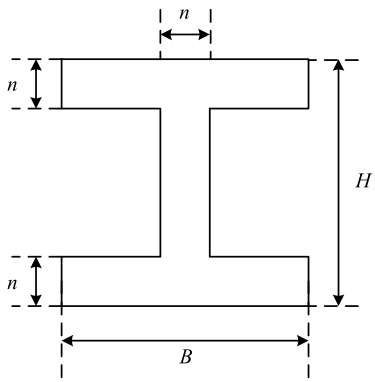

Figure 4. Cross-section of the H-beam

5.3. Solving the problem of data analysis

It is necessary for students to possess basic data analysis ability. Skills competitions provide students with the opportunity to collate and analyze data. What data should be obtained through simulation technology, and how to set specific parameters? Therefore, students are required to plan. The data to be measured are as follows:

(1) the stress distribution of the beam corresponding to each reduction amount and the maximum stress value;
(2) the pressure value of the load platform (self-weight is not considered) corresponding to each reduction amount.

The instructors carried out the modeling and simulation work. Through simulation, a lot of data were obtained. The students were required to process and analyze these data, including the maximum Mises stress values corresponding to different depressions (as shown in **Figure 5**). In order to complete these data processing tasks, the students learned the Origin software by themselves and made drawings in strict accordance with the requirements of the paper.

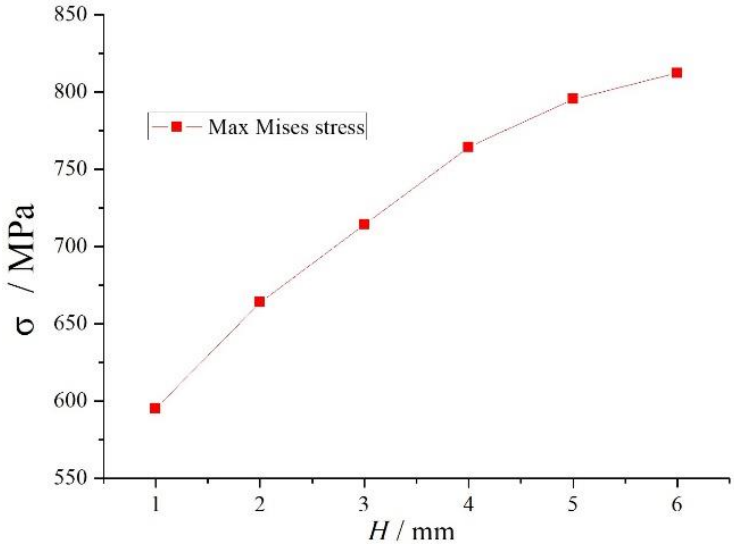

Figure 5. Maximum Mises stress values corresponding to different depressions

5.4. Solving the problem of less content in the declaration

As mentioned earlier, analyzing the problem is important, but solving it is even more critical. At the beginning, when preparing to write the declaration, the students had no idea how to start. Under the guidance of the instructors, the students came up with an overall plan. They divided the declaration into several parts, in which each part was analyzed according to the following questions: "What are the problems faced?", "What is the solution?", "What are the supporting figures and data?", and "What are the main conclusions?". With such an overall plan, the students completed the application. The colors in the stress nephogram (as shown in **Figure 6**) were the highlights of the declaration. The redder the color, the larger the stress, while the bluer the color, the smaller the stress.

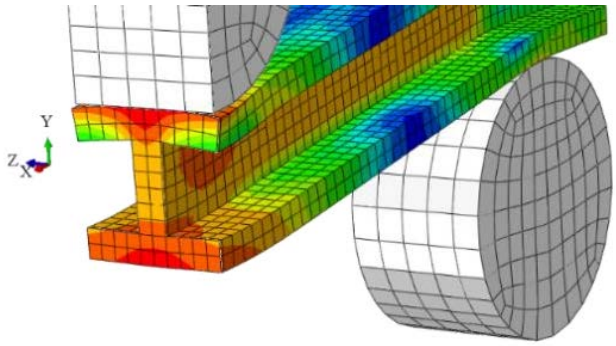

Figure 6. Stress nephogram of bending deformation of H-beam

6. Conclusions

The current professional talent training system of vocational colleges has several shortcomings, and a gap exists between skilled talents and the job requirements set by enterprises. Vocational skills competitions are a major reform and conceptual innovation of the vocational education system. It is necessary for students in vocational colleges to participate in skill competitions. However, it is inappropriate for schools to overemphasize the importance of obtaining award certificates; instead, teachers should attach importance to the process of improving students' ability to analyze and solve problems.

Funding

This research was supported by the project of China Vocational Education Association (Project Number: ZJS2022YB024) and the project of Innovation and Development Center of Ideological and Political Work (Beijing Polytechnic), Ministry of Education (Project Number: 2022X305-SXZC).

Disclosure statement

The authors declare no conflict of interest.

Author contributions

S.W. and F.P. conceived the idea of the study and wrote the first draft of the paper. M.L. revised the article's format.

References

[1] Wang S, 2019, Significance, Characteristics and Implementation Measures of the Implementation Plan of National Vocational Education Reform. Journal of Shijiazhuang Vocational and Technical College, 31(3): 4–10. http://doi.org/10.3969/j.issn.1009-4873.2019.03.002

[2] Meng K, Hao Z, 2022, The New Vocational Education Law: Significance, Characteristics and Breakthrough. Vocational and Technical Education, 43(15): 20–24. http://doi.org/10.3969/j.issn.1008-3219.2022.15.005.

[3] Liu X, 2022, Analysis of the "Good Law" Characteristics of the New Vocational Education Law from the Perspective of Policy Analysis. Vocational and Technical Education, 43(22): 6–10. http://doi.org/10.3969/j.issn.1008-3219.2022.22.002

[4] Liu C-B, Gao X-Q, Gao H-X, et al., 2017, Analysis of the Significance of Skills Competition Based on Civil Engineering Specialty Group at Vocational Colleges for Training Highly-Skilled Individuals. Humanity and Social Science: Proceedings of the International Conference on Humanity and Social Science (ICHSS2016), 130–136. https://doi.org/10.1142/9789813208506_0019

[5] Wan J, Chen BB, Si H, 2017, Mining and Measurement of Vocational Skills and Their Association Rules based on Big Data. Proceedings of the International Conference on Digital Technology in Education, 59–63. https://doi.org/10.1145/3134847.3134858

[6] Wu B, Li Y, 2018, Design of Evaluation System for Digital Education Operational Skill Competition based on Block Chain. 2018 IEEE 15th International Conference on E-business Engineering (ICEBE), 102–109. https://doi.org/10.1109/ICEBE.2018.00025

[7] Green A, 1998, Core Skills, Key Skills and General Culture: in Search of the Common Foundation in Vocational Education. Evaluation & Research in Education, 12(1): 23–43. https://doi.org/10.1080/09500799808666929

[8] Zheng M, 2022, Research on the Cultivation of Applied Top Talents of Sports Economic Management Specialty based on Vocational Skills Competition. Jiangsu Business Theory, 2022(08): 117-120. https://doi.org/10.13395/j.cnki.issn.1009-0061.2022.08.008

[9] Li S, 2021, The Research on the "Hierarchical Ladder" Training of Vocational Ability of Students in Electronic Major of Secondary Vocational School Based on the Professional Skills Competition. The Guide of Science & Education, 2021(13): 39–41. https://doi.org/10.16400/j.cnki.kjdk.2021.13.013

[10] Chankseliani M, James Relly S, Laczik A, 2016, Overcoming Vocational Prejudice: How can Skills Competitions Improve the Attractiveness of Vocational Education and Training in the UK? British Educational Research Journal, 42(4): 582-599. https://doi.org/10.1002/berj.3218

[11] Lu W, Li J, 2019, Research on the Application of Innovation Practice in the Digital Design of Industrial Products in the Higher Vocational Skills Competition. Journal of Qingdao Ocean Shipping Mariners College, 40(3): 51–56 + 74. https://doi.org/10.3969/j.issn.2095-3747.2019.03.012

Publisher's note

Bio-Byword Scientific Publishing remains neutral with regard to jurisdictional claims in published maps and institutional affiliations.

Journal of Contemporary Educational Research, 2022, Volume 6, Issue 12
http://ojs.bbwpublisher.com/index.php/JCER
ISSN Online: 2208-8474
ISSN Print: 2208-8466

Reflections on the Construction of the Key Elements of Vocational Education and Training System

Zhixin Feng[1], Shang Wang[1]*, Xueyi Zheng[2]

[1]School of Automotive Engineering, Beijing Polytechnic, Beijing 100176, China

[2]School of Art & Design, Beijing Polytechnic, Beijing 100176, China

Corresponding author: Shang Wang, wangshang@bpi.edu.cn

Copyright: © 2022 Author(s). This is an open-access article distributed under the terms of the Creative Commons Attribution License (CC BY 4.0), permitting distribution and reproduction in any medium, provided the original work is cited.

Abstract: Campus education and social training are the two most important functions of vocational colleges. Attaching importance to campus education while neglecting social training is a long-standing problem in vocational colleges. Vigorously developing higher vocational education is an inevitable requirement for the high-quality development of education in China and the ardent expectation of the public. Only through the construction a scientific and efficient education and training system and the deep integration of campus education with social training can the design of complementary resources and the improvement of talent training quality take place. The vocational education and training system contains many elements. This study takes teaching resources, teaching staff, and management mechanism as the main research subject and carries out related research work. Firstly, this paper expounds the policy documents of the Chinese government and emphasizes the importance of vocational education. Secondly, the relevant research results of scholars are reviewed. Thirdly, this paper proposes several specific suggestions for the construction of key elements of the vocational education and training system. Then, the main conclusions and prospects are summarized.

Keywords: Teaching resources; Higher vocational colleges; Campus education; Social training

Online publication: December 8, 2022

1. Introduction

China is a large, but not particularly strong, country in terms of vocational education. Since China's reform and opening-up, higher vocational education has made great progress, and the overall framework of modern vocational education has been fully established. At present, there are 1,418 higher vocational institutions in China. The number of students enrolled in higher vocational institutions has reached 11.34 million, with an employment rate of above 90% six months after graduation. With 580,000 specializations, vocational education covers the main areas of the national economy. In modern manufacturing, strategic emerging industries, and modern services, about 70% of workers come from vocational colleges. In terms of campus size, professional categories, the number of students enrolled, and the size of the teaching staff, China's higher vocational education has made certain achievements [1-3]. However, compared with developed countries such as Europe, America, and Japan, the vocational education and training system in China is not sound enough. Compared with the requirements of building a modern economic system and an educational powerhouse, China's vocational education leaves much to be desired. As China enters a new stage of development, the country's industrial upgrading and economic restructuring have accelerated. There is

more demand for technically skilled personnel in various industries. At the same time, enterprise positions have put forward higher requirements for the training of talents in higher vocational institutions. In recent years, the state has intensively issued a series of guiding documents, such as the National Implementation Plan for Vocational Education Reform and the Action Plan for Quality and Excellence in Vocational Education (2020–2023). Not only have they pointed out the direction for the development and reform of vocational education, but they have also provided goals and routes [4,5].

The vocational education and training system contains many elements, including talent training programmers, curricula, teaching resources, professional settings, teaching staff, academic degree management, teaching operation management, teaching quality assessment, laboratory and training room construction, finance and auditing, recruitment and employment, student work, and logistical support mechanisms. These elements are interlinked, and they can influence each other. They determine the quality of talent development in vocational education. Among these elements, the most crucial ones are teaching resources, teaching staff, and management mechanism.

2. Research status

Teaching resources, teaching staff, and management mechanism are important factors that support the high-quality development of vocational institutions. Previous scholars have conducted a lot of research work from different dimensions.

According to Luo [6], the teaching resources of vocational education had gone through three stages: sharing, teaching assistance, and intelligent learning. She suggested that the teaching resources should improve the standard and certification system. Taking the automobile manufacturing and assembly major as an example, Zhang [7] explained the necessity of constructing a professional teaching resource base. He stressed the importance of applying information technology and summarized some experiences in the construction of teaching resources. Hu [8], a scholar, took the semiconductor lighting technology major as an example to analyze the problems in the current resource construction process and put forward practical countermeasures. Fan [9], on the other hand, took the building materials technology major as an example to analyze the problems in the construction of professional teaching resources. He proposed that vocational colleges should set up professional teams and establish a quality evaluation system for teaching resources. Li [10] believes that the construction of shared teaching resources is an important way to improve the quality of talent training in higher vocational education. She studied the objectives and ideas of teaching resource construction by surveying and mapping the engineering technology major. Xin [11] believes that the construction of professional resources is the key to the high-quality development of higher vocational colleges. High quality professional resources can improve teaching quality and mobilize teachers' enthusiasm. According to Cui [12], an important way to promote the construction and simulation of a team of double qualified teachers is school-enterprise cooperation. In a study, Guo [13] claimed that young teachers generally lack practical teaching ability, thereby suggesting colleges and universities to create more opportunities for young teachers' after-school training. By analyzing the school-enterprise cooperation of Guangzhou Railway Vocational and Technical College, Peng [14] believes that the construction of a team of double qualified teachers is an important driving force of higher vocational colleges. Zhu [15], a scholar, suggests that higher vocational colleges should create a field training mode for professional teacher training and establish an internal and external system for teachers' professional development. Long [16], on the other hand, believes that the premise of cultivating high-quality professionals is the construction of professional teachers. In his paper, he suggested that vocational schools should encourage teachers to actively participate in various practical activities in enterprises. The degree system of vocational education at the undergraduate level was analyzed by Wang [17] in a study. According to his analysis, he concluded that the establishment of the degree system at the undergraduate level should fully

consider the current situation of the degree system and the new knowledge system. In another study, Fan [18] found that many teachers lack passion when working and perceive that higher vocational education is inferior. He made an in-depth analysis of this problem and found out the factors that affect the enthusiasm of higher vocational education teachers for teaching. Huang [19], a scholar, analyzed several problems existing in the incentive mechanism of higher vocational colleges and proposed the idea of building a scientific and effective incentive mechanism to "awaken" teachers' sense of value and stimulate their passion. Dai [20] believes that the cooperation between higher vocational colleges and enterprises lacks an operating mechanism, thus suggesting that higher vocational colleges should attach importance to school-enterprise cooperation and establish a school-enterprise cooperation operation mechanism to stimulate the vitality of the school. Taking the agricultural economic management major as an example, Zhao [21] proposed a talent training system oriented by industry demand and the reform of the core curriculum system. With the development of teaching reform and teaching means, significant changes have taken place in the teaching mode. Ji [22], a scholar, believes that the question of how to build a diversified evaluation system is an important issue faced by vocational colleges. He proposed the integration of process evaluation with summative evaluation by formulating corresponding evaluation standards.

3. Reflections and suggestions

3.1. Highlight the integration of "education training" in the construction

First of all, in the upgrading of the original teaching resources and the development of new teaching resources, the concept of "vocational education and vocational training are equally important" should be highlighted. Secondly, teachers should fully consider the cognitive laws of learners in the construction of teaching resources. Whether students or employees, the teaching content should be stepwise and suitable for their learning abilities. Third, practicality should also be emphasized in the construction of teaching resources. Taking the typical tasks of enterprises as teaching carriers may attract the interest of students. Last but not least, we should also pay attention to the construction of online teaching resources. At present, the prevalent COVID-19 virus continues to bring challenges to campus education and vocational training.

3.2. Continuously iterate the original teaching resources

Whether it is campus education or external training, the teaching resources that are needed have close associations with the actual demands of the industry. With the continuous iteration and upgrading of enterprise process technology, certain parts of the original teaching resources will no longer meet the requirements of certain jobs. Therefore, teaching resources must be iterated and updated with technological development, so as to meet the dual requirements of campus education and external training. School-enterprise cooperation is an impetus for the upgrading of teaching resources. Schools should actively promote the integration of production and teaching and constantly integrate the new processes, new technologies, and new norms of enterprises into the teaching system by means of regular academic exchanges or by arranging teachers to be involved in enterprise activities.

3.3. Attach importance to the development of teaching resources

Word and PowerPoint, as traditional teaching resources, suppress students' learning interest and learning initiative. The new form of teaching resources, represented by videos and animations, can attract students' attention to a great extend and improve the teaching quality. The development of new forms of teaching resources is very time-consuming and effort-consuming. In order to develop them more efficiently, teachers should first perform a demand analysis and determine the specific knowledge points and skills points to be learned. In addition, teachers should pay attention to the diversity of learning design. Many scholars have proven that interactive learning design, task-based learning design, and intelligent promotion design can

improve the teaching quality.

3.4. Formulate incentive measures and systems

The teaching team is an important driving force for higher vocational colleges. The construction of a team of double qualified teachers will not only improve the comprehensive quality of teachers in higher vocational colleges, but also their teaching ability and teaching level. In order to ensure an efficient implementation of the related work, higher vocational colleges must strengthen the construction of a supportive system. It is necessary to establish an effective incentive mechanism, which can improve teachers' enthusiasm and initiative. Teachers should also be encouraged to learn on the production lines of enterprises. Only when teachers can master the latest techniques and incorporate them into their teaching content, then the quality of teaching can be improved.

3.5. Use various skill competitions to improve teachers' ability

Skills competition is an important part of the vocational education system. It plays an important guiding role in the reform of vocational education. In higher vocational colleges, teachers can resort to integrate the contents of competition works into classroom teaching. This will help stimulate students' interest in learning. When students are interested in the teaching content, they will naturally take the initiative to learn, thus imperceptibly improving the quality of teaching. Teachers also need to think carefully about how to integrate these skills competition works into the teaching system in an appropriate manner. This process improves teachers' teaching ability and encourages students to participate in skill competitions.

3.6. Strengthen school-enterprise cooperation

Enterprises are the receiving units of talents who are cultivated by schools. It is important for schools and enterprises to cooperate to set up majors and develop relevant curriculum systems according to the demands of the job market. It is also necessary to increase personnel exchanges between schools and enterprises. On the one hand, skilled workers from enterprises should "come in." Advancing enterprise training classes to higher vocational colleges and arranging enterprise managers or skilled workers to serve as part-time teachers would be beneficial. On the other hand, school teachers should "go out." Schools should encourage their own teachers to practice and learn new technologies in enterprises.

3.7. Strengthen the training of teachers

The improvement of teaching cannot be separated from a high-level and professional team of teachers. In order to create such a team of teachers, schools should strengthen their training efforts, especially for young teachers. The training should have targeted contents; otherwise, there will be a poor training effect. On the one hand, the organizer can find out what teachers require in their training through questionnaires and other forms. On the other hand, the organizer should communicate more with enterprises and focus on the latest technologies that these enterprises are using. In addition to training, various forms of teaching and research activities should also be considered. School leaders should encourage teachers (especially young teachers) to boldly carry out curriculum reform and innovate teaching models.

3.8. Establish the "credit bank" system

At present, campus teaching and social training in most vocational colleges are managed separately. The two data are not shared, resulting in repeated learning. For example, an employee from an automobile company desires to obtain a certificate in advanced stamping through social training. Although he had already learned about stamping in school, he would be taught again in social training. Therefore, the establishment of the "credit bank" system is an important measure. The lack of corporate and social

awareness of the "credit bank" system reflects the lack of publicity from vocational schools. Schools and enterprises should strengthen their cooperation in terms of the "credit bank" system and form a consensus.

4. Conclusions

Higher vocational education is an important part of China's education system. Vigorously developing vocational education is the requirement of national economic development and the ardent expectation of the public. The phenomenon where campus education receives more attention and social training less has long existed in vocational colleges. Vocational colleges should focus on the construction of a scientific and efficient education and training system. Only through the deep integration of campus education with external training can the design of complementary resources and the improvement of talent training quality take place.

Funding

This work was supported by the Project of Beijing Office for Education Sciences Planning (Project Number: CCDB2020135) and the Project of Innovation and Development Center of Ideological and Political Work (Beijing Polytechnic), Ministry of Education (Project Number: 2022X305-SXZC).

Disclosure statement

The authors declare no conflict of interest.

Author contributions

S.W. and Z.F. conceived the idea of the study and wrote the first draft of the paper, while X.Z. revised the article's format.

References

[1] Wang S, 2019, Significance, Characteristics and Implementation Measures of the Implementation Plan of National Vocational Education Reform. Journal of Shijiazhuang Vocational and Technical College, 31(3): 4–10. https://doi.org/10.3969/j.issn.1009-4873.2019.03.002

[2] Cheng Y, Wu R, 2021, Analysis and Research on the Current Situation of Higher Vocational Education based on Bibliometric. The Guide of Science & Education, 2021(8): 1-3. https://doi.org/10.16400/j.cnki.kjdkz.2021.03.001

[3] Xu Y, 2014, Analysis on the Current Situation and Development Trend of Higher Vocational Education in China. China Chemical Trade, 2014(15): 257. https://doi.org/10.3969/j.issn.1674-5167.2014.15.233

[4] Liu K, 2019, Defining the Strategic Position of Vocational Education and Promoting the Connotative Development of Vocational Education. Communication of Vocational Education, 2019(3): 17–22. https://doi.org/10.3969/j.issn.1674-7747.2019.03.004

[5] Yang Q, 2021, The Action Plan of "Improving Quality and Training Excellence" is Implemented to Improve the Level of Private Vocational Education. Journal of Guangdong Agricultural and Commercial Vocational and Technical College, 37(2): 48–51. https://doi.org/10.3969/j.issn.1009-931X.2021.02.012

[6] Luo Y, 2022, The Development Course and Construction Path of the Professional Teaching Resource Database of Vocational Education. Hebei Vocational Education, 6(2): 16–19. https://doi.org/10.3969/j.issn.1672-8963.2022.02.003

[7] Zhang G, 2019, Research on the Construction of Digital Resources for Learning and Teaching in Higher Vocational Education for Automobile Manufacturing and Assembly Technology Specialty. Journal of Xiangyang Vocational and Technical College, 18(4): 29–31 + 38. https://doi.org/10.3969/j.issn.2095-6584.2019.04.008

[8] Hu H, Lai L, Liang L, et al., 2022, Research on the Construction and Application of Teaching Resource Bank of Higher Vocational Education. University Education, 2022(6): 139–141. https://doi.org/10.3969/j.issn.2095-3437.2022.06.043

[9] Fang J, Zuo M, 2021, The Quality Control of the Construction of the Professional Teaching Resource Database of Vocational Education--Taking the Teaching Resource Database of Building Materials Engineering Technology as an Example. Journal of Wuhan Polytechnic, 20(4): 27–31. https://doi.org/10.19899/j.cnki.42-1669/Z.2021.04.004

[10] Li M, Zhang D, Lv C, 2011, Construction and Realization of Teaching Resources in Professional Surveying and Mapping Engineering. Value Engineering, 30(29): 172–173. https://doi.org/10.3969/j.issn.1006-4311.2011.29.118

[11] Xin M, 2020, Research on the Construction of Teaching Resources Library Major in Higher Vocational Colleges. Future and Development, 44(12): 105–108. https://doi.org/10.3969/j.issn.1003-0166.2020.12.018

[12] Cui L, 2008, Discussing the Role of Higher Education Institutions in School-enterprise Cooperation in Training Double Qualified Teachers. Continue Education Research, 2008(12): 82–83. https://doi.org/10.3969/j.issn.1009-4156.2008.12.033

[13] Guo Z, 2007, Measures to Increase the Proportion of "Double Qualified" Teachers. Vocational and Technical Education, 2007(29): 54 + 84. https://doi.org/10.3969/j.issn.1008-3219.2007.29.027

[14] Peng H, 2017, Exploration and Practice of Building a Higher Vocational "Double Qualified" Teacher Training System through School-Enterprise Cooperation--Guangzhou Railway Vocational and Technical College as an Example. Southern Journal of Vocational Education, 7(06): 80–85. https://doi.org/10.3969/j.issn.2095-073X.2017.06.016

[15] Zhuang X, 2022, Professional Development of Teachers in Vocational Institutions: Connotation Characteristics, Stages and Realization Paths. China Higher Education Research, 2022(04): 97–102. https://doi.org/10.16298/j.cnki.1004-3667.2022.04.15

[16] Long J, Weng W, Chen J, 2022, Research on the Path of Professional Development of Teachers in Vocational Colleges based on the Integration of Industry and Education. Continuing Education Research, 2022(11): 42–46. https://doi.org/10.3969/j.issn.1009-4156.2022.11.009

[17] Wang D, Li Y, 2022. Academic Thinking on Degree System Construction of Vocational Education at Undergraduate Level. Journal of Higher Education Management, 16(4): 75–84. https://doi.org/10.13316/j.cnki.jhem.20220615.008

[18] Fan L, Jiao Y, Li L, et al., 2015, A Preliminary Analysis about Factors Affecting Teachers' Working Enthusiasm in Higher Vocational Schools. Journal of Tianjin Vocational Institutes, 2015(7): 111–113 + 128. https://doi.org/10.3969/j.issn.1673-582X.2015.07.025

[19] Huang H, Mei H, 2020, Thoughts on Promoting Teachers' Enthusiasm in Higher Vocational Colleges by Means of Motivation Theory. Journal of Hubei Vocational-Technical College, 23(2): 44–47. https://doi.org/10.16347/j.cnki.cn42-1742/z.2020.02.010

[20] Dai X, 2022, The Current Situation and Path of School-Enterprise Cooperation in Higher Vocational Colleges from the Perspective of Industry-University-Research Integration. Journal of Qilu Normal

University, 37(3): 7–11 + 19. https://doi.org/10.3969/j.issn.1008-2816.2022.03.002

[21] Zao D, Nie H, 2021, Study on the Construction of Talent Training Mode and Curriculum System of "Learning, Working, Service and Innovation" in Agricultural Economic Management Specialty in Higher Vocational Colleges. Journal of Heilongjiang Vocational Institute of Ecological Engineering, 34(6): 140–142. https://doi.org/10.3969/j.issn.1674-6341.2021.06.036

[22] Ji M, 2022, On Construction and Application of Multiple Evaluation System in English Teaching in Vocational Colleges. Vocational Education Research in Xinjiang, 13(1): 26–29. https://doi.org/10.3969/j.issn.1674-8689.2022.01.006

Publisher's note

Bio-Byword Scientific Publishing remains neutral with regard to jurisdictional claims in published maps and institutional affiliations.

Journal of Contemporary Educational Research, 2022, Volume 6, Issue 12
http://ojs.bbwpublisher.com/index.php/JCER
ISSN Online: 2208-8474
ISSN Print: 2208-8466

Generative Mechanisms of Classroom Silence and the Path of Avoidance

Minmin Xie*, Huanhuan Luo, Wenhao Yao

South China Normal University, Guangzhou 510006, Guangdong Province, China

****Corresponding author:*** Minmin Xie, 13570485766@163.com

Copyright: © 2022 Author(s). This is an open-access article distributed under the terms of the Creative Commons Attribution License (CC BY 4.0), permitting distribution and reproduction in any medium, provided the original work is cited.

Abstract: Classroom silence is complex and discrete problem. It affects the overall teaching and learning quality as well as the high-quality development of both teachers and students. Avoiding classroom silence is a highly dynamic and valuable learning process. This study explores the ecological logic of classroom silence of both teachers and students based on the connotation of classroom silence and deconstructs the endogenous and exogenous mechanisms of classroom silence from the perspectives of escape culture and the continuity theory. Following that, we construct a new model of interaction for elementary school classroom, which includes optimizing the teaching evaluation tools, creating a multidimensional physical technology environment, and fostering an interactive culture of returning to the classroom, so as to promote the overall classroom effectiveness.

Keywords: Classroom silence; Escape culture; Continuity theory

Online publication: December 8, 2022

1. Introduction

The avoidance of classroom silence is a challenge that must be undertaken to improve the teaching and learning quality. Being a highly complex and discrete problem, classroom silence directly affects the quality of both teaching and learning. As an important part of individual well-being and physical and mental health, students' feelings, including those in the classroom, can influence their ability for self-adjustment, cognitive learning, and knowledge creation [1-3]. Students' silence in classroom continues to be of concern to educators and scholars. Creating healthy classrooms is crucial for improving students' physical, mental, and spiritual health and performance [4]. However, the reality is that classrooms are generally alienated by the lack of student agency, the spirit of interaction, the single purpose of interaction, and the imbalance of interaction structures. What then are the paths to dealing with the complexity in classrooms? Avoiding classroom silence is one of the ways. The avoidance of classroom silence is conducive to the principle of intersubjective interaction, which enables both teachers and students to engage in linguistic dialogue, shape a negotiated discourse environment, and effectively improve the quality of classroom teaching. The majority of existing studies have focused on subject-specific teaching and learning scenarios, making the findings and conclusions overly dependent on scenarios and leaving little room for theoretical advancements. Secondly, more than half of the studies are concerned with the causal factors of classroom silence without much discussions on its mechanism, thereby failing to explore the optimization path in greater depth. Thirdly, the theoretical perspectives embedded in the studies are still inadequate and lack systematic integration of theories for in-depth exploration.

Therefore, this study fully embeds the perspectives of the continuity theory and escape culture to explore the connotation of classroom silence, deconstruct the mechanism of this phenomenon, and provide effective avoidance paths, so as to provide concrete and authoritative theoretical guidance on the mechanism of generation and the path of avoidance.

2. Connotation of classroom silence

The commitment to cultivating socialist successors who can respond to the challenges of technological change, globalization, and international competition is an important goal of socialist education in the new era. Therefore, it is especially important and urgent to improve the quality of teaching in classroom. An effective and interactive classroom is about students' mastery of knowledge and skills, their physical and mental development, and the cultivation of good moral character. The research on classroom silence began from "dumb classroom" in English language teaching, but later, it was found that this silent phenomenon or behavior is not restricted to English classrooms only [5]. Following that, the research gradually extended to general classroom teaching. Although there has been a wealth of research on this silence phenomenon, there is still no mature or widely accepted definition for this concept. It is vague and burdened with numerous communicative significances [6]. The current definitions of classroom silence can be broadly classified into two categories: phenomenal and behavioral, with the former considering classroom silence as the phenomenon of students not asking questions in classroom [7,8] and the latter considering it as the behavior of students not answering or asking questions in classroom [9,10]. These definitions are based on the student perspective, neglecting teachers as the integral part and mechanically separating teachers from students. However, classroom teaching refers to the process of educators guiding educatees in cultivating various learning behaviors. It is an activity involving both teaching and learning in unison [11]. Teachers have a noteworthy function in classroom silence and a significant impact on students' silence [12,13]. Therefore, the connotation of classroom silence in this study points to the silence of both teachers and students, including when the teachers' minds "escape" from the classroom and they end up teaching mechanically and when the students do not need to ask or answer questions based on their tendency to leave the classroom. The two are interactive, interconnected, and mutually influential.

3. Deconstructing the generative mechanisms of classroom silence

3.1. Endogenous mechanism

One of the theoretical contributions of this study is the analysis of teachers' silence and students' silence from the perspectives of both escape culture and the continuity theory.

First, the generative mechanism of teachers' silence is deconstructed from the perspective of escape culture. "Escape culture" refers to escape from current "workings" of schooling. When teachers selectively reduce their levels of integration into the workings of schooling, they inevitably choose to engage passively in both teaching and learning, constructing the classroom in silence to achieve an internal "escape." Such teachers are not aggressive; instead, they treat students and the classroom in a passive manner. They do not take into account of students' receptiveness and willingness; instead, they "simply and brutally" use the indoctrination approach to mechanically deliver materials to students. Sometimes, they even play videos for students to watch and learn on their own. Ultimately, the classroom is plunged into a "teacher's voice only" or "silent" situation. At the same time, there are teachers who use various "guerrilla tactics" to cope with the school's classroom demands, believing that their "escape" from the classroom is justifiable because neither the school nor the students explicitly resist this "escape culture." As a result, they believe that their "escape" from the classroom can be accommodated to some extent. This continued accommodation will lead to continued "escape," thus creating an infinite cycle that eventually results in the highly damaging "tornado of silence in classroom."

Second, the generative mechanism of students' silence is deconstructed through the lens of the continuity theory. Previous studies have largely attributed students' silence to low self-confidence, poor communication skills, strong herd mentality, and backward learning concepts [14]. However, they have yet to analyze the reasons students choose to be silent in classroom from the level of continuity and students' internal needs. The continuity theory, which emphasizes the existence of a complex, ambiguous need for connection between the past and living in the present, states that people can achieve sufficient well-being and self-esteem by maintaining a level of social participation that meets their actual needs. At different stages of life, students have different levels of self-awareness, where they perceive, think, and intend about themselves in terms of their physical characteristics, such as height and weight; mental characteristics, such as temperament and hobbies; as well as spiritual characteristics, such as hard work and perseverance. Accordingly, their choice to remain silent in classroom stems from their choice to match their desired level of social participation based on certain self-perceptions. Students may remain silent in classroom so as to build self-esteem and gain more happiness. In short, students who do well academically and those who do not do well academically tend to use silence for different purposes. The first group intends to reinforce their status as exceptional students, whereas the second group often use silence to reinforce their status as being less competent [15].

3.2. Exogenous mechanism

The exogenous mechanism of classroom silence mainly involves three aspects: unreasonable design of teaching evaluation, single classroom environment, and disconnected instructional process.

Firstly, the unreasonable design of teaching evaluation in classroom leads to teachers' silence. According to an interview on the existing teaching evaluation, the amount of class time, class performance, student evaluation, and debriefing evaluation are concerns, among which the formalized student evaluation and subjective debriefing evaluation have led to unreasonable classroom teaching evaluation and affected the attentiveness of teachers to the effectiveness of teaching and the dynamicity of classroom environment. It is easy to overlook the complexity and dynamic nature of classroom teaching, obscure the subjectivity and development of both teachers and students, as well as lose the value and meaning of classroom teaching [16].

Secondly, the single classroom environment also directly contributes to classroom silence. The single classroom environment is mainly reflected in two aspects, namely, the teaching method and the integration of teaching resources. The teaching method is still based on the traditional indoctrination approach, in which teachers are regarded as the transferring and transmitting tools of teaching materials, while students are regarded as "receivers." This approach disregards the "vitality" of the classroom. Teaching resources include the teaching materials, the teaching environment, and the teaching support system. The existing teaching materials are piles of texts displayed on PowerPoint slides, which are read aloud to students, neglecting students' subjectivity and enthusiasm. The classroom is basically a "cold" environment, consisting of tables, chairs, blackboards, and multimedia equipment. The only piece of information technology used in the classroom is a standard multimedia computer, a microphone, and a projector. There is a dearth of open and active online interaction with students [17].

Thirdly, there is a serious disconnection among teaching, learning, and pratice in the classroom. This disconnection between teachers' teaching, students' learning, and students' practical ability to use knowledge to solve problems is evident. Teachers tend to focus solely on imparting knowledge; they rarely pay attention to the extent of students' learning and application of knowledge. Hence, students are caught up in the acquisition of written knowledge, and they lack the ability to think, internalize knowledge, and realize the invocation of knowledge in real life.

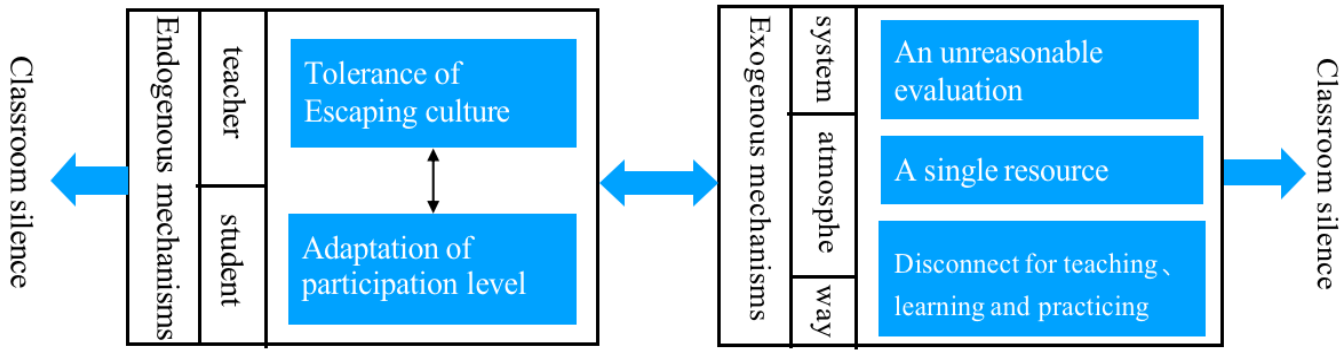

Figure 1. Generative mechanisms of classroom silence

4. Establishing a new model of classroom interaction

4.1. Optimizing teaching evaluation tools

Teaching evaluation tools are important means for classrooms to realize their teaching values. The establishment of a scientific and effective comprehensive teaching evaluation system would help to break the classroom silence phenomenon and promote the high-quality development of both teachers and students, thus improving the overall quality of classroom teaching.

Schools should use motivational evaluation tools to improve the traditional teaching evaluation that is fully based on the amount of class time and class grades. In addition to classroom inspection and listening in during lessons, schools should also actively carry out extended evaluation to encourage teaching input from teachers, that is, to establish a scientific and objective four-dimensional classroom evaluation index system comprising results, process, value-added, and comprehensive, so as to conduct more systematic, accurate, and effective teaching evaluation as well as to motivate teachers to create a charming image for students. Second, schools should use basic assessment tools appropriately to promote the participation of both teachers and students in classrooms, including the preparation of systematic teacher-student classroom development plans and institutional tools as well as the design of assessment tools to stimulate teacher-student interaction and enhance the interactive atmosphere in the classroom. In short, breaking away from the rationality of teaching evaluation, focusing on the ecological guidance of teaching evaluation, and thus promoting both teachers' and students' participation in classrooms will breakings the silence in classrooms.

4.2. Creating a multidimensional physical technology environment

School classrooms need to be built on a diverse and three-dimensional physical technology environment that allows for a greater variety of teaching methods and a greater integration of resources.

First, course teaching can promote the diversification and informatization of teaching methods by incorporating physical technology. Teachers can use modern physical technology to change the traditional indoctrination approach, making the classroom more vivid and interesting. At the same time, they can build a digital portrait for each student by using information technology data to achieve personalized teaching. For example, the artificial intelligence (AI) assistant can act as a teaching assistant in classroom, creating a library of questions and answers to the common problems faced by students, and providing timely voice answers to students' questions when the same problems are repeatedly consulted. The AI assistant not only enables the classroom to integrate high-end technology elements of AI, but also innovates the manner of interaction between teaching and learning and allows teachers to save more time. Teachers can then focus more on communicating and interacting with the students so as to alleviate students' silence. Second, the use of physical technology to integrate classroom teaching resources makes classroom teaching resources more diverse and assists teachers in conducting their classes more creatively. For example, in addition to basic paper-based textbooks, it is necessary to introduce a variety of teaching materials that suit the learning

habits of different students, provide diverse online classes and websites with a large library of teaching resources, and offer supplementary WeChat platforms and apps to display high-quality videos, test questions, exam assessments and analyses, *etc*. At the same time, schools should also build a comprehensive intelligent teaching platform to provide a new medium for interactive input from both teachers and students. Teachers can use intelligent interactive functions to provide accurate and efficient tutoring to students anytime and anywhere, while students can publicly share and display their learning results on the smart platform in a timely manner.

4.3. Fostering an interactive culture of returning to the classroom

Since teachers gain a degree of autonomous inclusion and other directed inclusions by being silent in classroom, they selectively escape the classroom; students, on the other hand, selectively disengage from the classroom in order to maintain a certain level of classroom participation to meet their respective needs for optimal well-being.

Therefore, in order to break the silence in classroom, we must create an interactive culture in classroom, which would promote the "return" of teachers and students to the classroom. Classroom teaching is essentially an activity in which human beings interact materially and spiritually to transmit culture, adapt to cultural change, and promote their own growth and social development. Classroom culture can be considered a combination of norms, values, beliefs, and ideological symbols in classroom teaching [18]. It is mainly expressed by the teacher's interdisciplinary thinking and the effective integration of teaching and learning to stimulate students' interest and mobilize their selective participation [19], considering that students have the "need" to selectively ask questions according to their own needs. Students selectively ask or respond to the teacher's questions according to their own needs and the need to immerse themselves in the classroom through "dialogues" with the teacher. This ultimately improves their learning involvement and in accomplishing something [20]. With an interactive culture, a good question-and-answer cycle can be established between teachers and students. In that way, teachers can no longer "escape" from the classroom, while students can no longer leave the classroom.

5. Conclusion

There are generally two generative mechanisms of classroom silence: endogenous and exogenous mechanisms. The endogenous mechanism is reflected in the selective escape of teachers and students from the classroom; on the other hand, the exogenous mechanism is reflected in the unreasonable design of teaching evaluation, the single classroom environment, and the disconnection among teaching, learning, and practice. In order to construct a new model of classroom interaction, it is necessary to optimize the teaching evaluation tools, create a multidimensional physical technology environment, and establish an interactive culture that promotes the "return" of both teachers and students to the classroom. In addition, the phenomenon of classroom silence has not been explored extensively from the perspective of "escape culture." Hence, future research may consider adopting this perspective and using empirical research methods to verify the specific generative mechanisms of classroom silence.

Disclosure statement

The authors declare no conflict of interest.

Author contributions

M.X. conceived the idea of the study, while H.L. and W.Y. collected the study materials.

References

[1] Pekrun R, Goetz T, Perry RP, et al., 2004, Beyond Test Anxiety: Development and Validation of the Test Emotions Questionnaire (TEQ). Anxiety, Stress & Coping, 17(3): 287–316. http://doi.org/10.1080/10615800412331303847

[2] Harley JM, Pekrun R, Taxer JL, et al., 2019, Emotion Regulation in Achievement Situations: An Integrated Model. Educational Psychologist, 54(2): 106–126. http://doi.org/10.1080/00461520.2019.1587297

[3] Dewaele JM, Witney J, Saito K, et al., 2018, Foreign Language Enjoyment and Anxiety: The Effect of Teacher and Learner Variables. Language Teaching Research, 22(6): 676–697. http://doi.org/10.1177/1362168817692161

[4] Pekrun R, 2006, The Control-Value Theory of Achievement Emotions: Assumptions, Corollaries, and Implications for Educational Research and Practice. Educational Psychology Review, 18(4): 315–341. https://doi.org/10.1007/s10648-006-9029-9

[5] Yu Z, 2016, The Analysis About the Factors of Silence in College English Classroom. Studies in Literature and Language, 12(5): 105–110. http://doi.org/10.3968/8402

[6] Liu M, 2005, Reticence in Oral English Language Classrooms: A Case Study in China. TESL Reporter, 38(1): 1–16.

[7] Bottalico P, Astolfi A, Hunter EJ, 2017, Teachers' Voicing and Silence Periods During Continuous Speech in Classrooms with Different Reverberation Times. The Journal of the Acoustical Society of America, 141(1): 26–31. http://doi.org/10.1121/1.4973312

[8] Frenzel AC, Daniels L, Buric I, 2021, Teacher Emotions in the Classroom and Their Implications for Students. Educational Psychologist, 56(4): 250–264. https://doi.org/10.1080/00461520.2021.1985501

[9] TJakobsson P, Stiernstedt F, 2018, Voice, Silence and Social Class on Television. European Journal of Communication, 33(5): 522–539. http://doi.org/10.1177/0267323118784819

[10] Savage G, 2008, Silencing the Everyday Experiences of Youth? Deconstructing Issues of Subjectivity and Popular/Corporate Culture in the English Classroom. Discourse: Studies in the Cultural Politics of Education, 29(1): 51–68. http://doi.org/10.1080/01596300701801344

[11] Gregersen T, 2007, Breaking the Code of Silence: A Study of Teachers' Nonverbal Decoding Accuracy of Foreign Language Anxiety. Language Teaching Research, 11(2): 209–221. http://doi.org/10.1177/1362168807074607

[12] Li BD, 2011, Theory of Teaching and Learning, People's Education Press, Beijing, 2.

[13] Hayes R, Matusov E, 2005, Designing for Dialogue in Place of Teacher Talk and Student Silence. Culture & Psychology, 11(3): 339–357. http://doi.org/10.1177/1354067x05055525

[14] Ollin R, 2008, Silent Pedagogy and Rethinking Classroom Practice: Structuring Teaching Through Silence Rather than Talk. Cambridge Journal of Education, 38(2): 265–280. http://doi.org/10.1080/030057640802063528

[15] Thiel U, 2011, The Early Modern Subject: Self-Consciousness and Personal Identity from Descartes to Hume, Oxford University Press, NewYork, 103.

[16] Sedova K, Navratilova J, 2020, Silent Students and the Patterns of Their Participation in Classroom Talk. Journal of the Learning Sciences, 29(4–5): 681–716. http://doi.org/10.1080/10508406.2020.1794878

[17] Gabb D, 2006, Transcultural Dynamics in the Classroom. Journal of Studies in International Education, 10(4): 357–368. http://doi.org/10.1177/1028315306288594

[18] Wu CN, 1999, The Sociology of Classroom Teaching, Nanjing Normal University Press, Nanjing, 117.

[19] Velez JJ, Cano J, 2008, The Relationship Between Teacher Immediacy and Student Motivation. Journal of Agricultural Education, 49(3): 76–86. http://doi.org/10.5032/jae.2008.03076

[20] Waldeck J, Kearney P, Plax T, 2001, Teacher E-Mail Message Strategies and Students' Willingness to Communicate Online. Journal of Applied Communication Research, 29(1): 54–70. http://doi.org/10.1080/00909880128099

Publisher's note

Bio-Byword Scientific Publishing remains neutral with regard to jurisdictional claims in published maps and institutional affiliations.

Journal of Contemporary Educational Research, 2022, Volume 6, Issue 12
http://ojs.bbwpublisher.com/index.php/JCER
ISSN Online: 2208-8474
ISSN Print: 2208-8466

Research on the Carbon Peak and Carbon Neutralization Model in Colleges and Universities: Taking China University of Geosciences (Beijing) as an Example

Huiping Han*

China University of Geosciences (Beijing), Beijing 100083, China

Corresponding author: Huiping Han, 120687000@qq.com

Copyright: © 2022 Author(s). This is an open-access article distributed under the terms of the Creative Commons Attribution License (CC BY 4.0), permitting distribution and reproduction in any medium, provided the original work is cited.

Abstract: The "3060" goal demonstrates China's responsibility in actively responding to global climate, enhances China's voice and influence in climate governance, and sets an example of energy conservation and emission reduction for developing countries. As the main institutions that educate people for the Party and the country, colleges and universities have the responsibility to explore the realization path of carbon peak and carbon neutralization against the new problems encountered in the practice of energy conservation and emission reduction in colleges and universities. In response to the national strategy and the action plan of the Ministry of Education, taking the carbon practice of China University of Geosciences (Beijing) as the starting point, this paper conducts benchmarking research on the path of carbon peak and carbon neutralization in universities through the ecological factor method, campus carbon footprint, and questionnaire analysis.

Keywords: Carbon peak; Carbon neutralization; Colleges and universities; Conserve energy; Reduce emissions; Benchmarking research

Online publication: December 14, 2022

1. Introduction

In 2021, the Ministry of Education released the Action Plan for Carbon Neutral Scientific and Technological Innovation in Colleges and Universities, which points out the direction for energy conservation and emission reduction goals in colleges and universities. Colleges and universities must assume the leadership role in the community of shared future for mankind and shoulder the responsibility of providing scientific and technological innovation for economic and social transformation. Colleges and universities should seize the opportunity, fulfill the mission and the "3060" goal, as well as explore the origin of carbon peak and carbon neutralization in colleges and universities.

2. Background of "3060"

"Carbon peak" refers to the highest point at which carbon dioxide emissions of a region or an industry cease from increasing and begin to decline at a certain time period, that is, the historical turning point at which carbon dioxide levels start to drop. "Carbon neutralization," on the other hand, refers to the process whereby the organization as a whole achieves a balance between the emission and absorption of carbon dioxide within a certain period of time. Carbon peak and carbon neutralization are important goals and directions

to prevent greenhouse gases from affecting the climate. The implementation of the "14th Five Year Plan" and the comprehensive promotion of the low-carbon transformation of the national economy are major strategic measures.

In the long history of human evolution, the climate situation and climate change, the changes in the living environment caused by both of them, and the innovation and widespread adoption of production technology are important driving forces that promote the development of human society and the evolution of civilization. On September 22, 2020, Chian solemnly announced at the 75th session of the United Nations General Assembly that China will increase its national independent contribution, adopt more powerful policies and measures, strive to reach carbon peak by 2030, and strive to achieve carbon neutrality by 2060 [1]. At the 29th Learning Conference of the Political Bureau of the Central Committee of the Chinese Communist Party, the importance of carbon peak and carbon neutralization was repeatedly emphasized [2]. At the meeting of the Political Bureau of the Central Committee of the Chinese Communist Party in July 2021, the action plan for carbon peak by 2030 was recommended to be introduced as soon as possible [3]. Three documents were issued within one week in October 2021: "Opinions of the Central Committee of the Communist Party of China and the State Council on the Complete, Accurate, and Comprehensive Implementation of the New Development Concept to Achieve Carbon Peak and Carbon Neutralization [4]," "Notice of the State Council on Printing and Distributing the Carbon Peak Action Plan by 2030 [5]," and "Opinions of the General Office of the Central Committee of the Communist Party of China and the General Office of the State Council on Promoting Green Development of Urban and Rural Construction [6]." At the end of December 2021, the State Council issued a notice on the issuance of the 14th Five Year Comprehensive Work Plan for Energy Conservation and Emission Reduction [7].

Under the background of "3060," the "14th Five Year Plan" period is the key period to achieve carbon peak. As a key unit of energy consumption, the scale of energy use, management level, lifestyle, and consumption concept of colleges and universities determine the characteristics of carbon emissions. The per capita energy consumption is far higher than the urban average. Urban carbon emissions account for more than 85% of the country's [8], and energy-related carbon dioxide emissions are approximately 10 billion tons [9]. However, since 2012, more than 800 universities in more than 100 countries have joined the "Global Environment and Sustainable Development University Alliance," but none of them has officially conducted scientific measurement and target management of carbon emissions. If the innovation of production technology makes new buildings green, the annual consumption of 3,005 colleges and universities across the country will be reduced by 15%–30% [11]. If colleges and universities have a unified plan for carbon emissions and further disseminate technological innovation, the economic and social benefits of carbon neutralization in colleges and universities will be more evident.

After the goal of "3060" was put forward, Chinese universities began taking their own measures one after another. Tsinghua University established the "World University Climate Change Alliance"; Peking University and Sichuan University established the "Carbon Neutralization Research Institute"; Tongji University held a forum titled "Dual Carbon Goals and Paths for Colleges and Universities" and is conducting a comprehensive study on dual carbon strategy; Zhejiang University, University of Science and Technology of China, Shanghai Jiaotong University, Zhejiang University, Nanjing University, East China Normal University, Southeast University, and Fudan University jointly signed the "Declaration on Carbon Neutralization Action in Chinese Colleges and Universities", established the "Yangtze River Delta University Alliance for Sustainable Development," signed the Charter of Yangtze River Delta University Alliance for Sustainable Development, and issued the "Initiative for Promoting Double Carbon Action in Colleges and Universities"; China University of Geosciences (Wuhan) initiated the preparation for the "Carbon Neutral Plan" [10]; China University of Geosciences (Beijing) officially launched the construction of a green campus in 2022. Efforts are made in teaching, scientific research, field practice, logistics support,

and other aspects to implement the critical task of energy conservation and emission reduction.

This paper takes the practice of carbon peak and carbon neutralization in China University of Geosciences (Beijing) as an example to analyze the problems and corresponding solutions in hope to provide reference to universities for carbon emission reduction.

3. Carbon peak and carbon neutralization practice

As of August 2022, China University of Geosciences (Beijing) has 1,461 faculties and 16,898 students, covering an area of 453,300 square meters and a building area of about 523,000 square meters, with 29 energy-consuming buildings, including 13 teaching buildings, 9 dormitory buildings, 2 office buildings, 1 library, 1 gymnasium, 1 conference center, 1 school infirmary, 2 canteens, 1 waste station, 1 express station, 10 power distribution rooms, 1 boiler room, and other supporting facilities. The energy consumption system includes heating, catering, power transformation and distribution, central air conditioning, elevators, experimental instruments, office equipment, solar energy, lighting, water supply, garbage stations, road traffic, *etc*.

Based on the top-level design of the "3060" goal, the "14th Five Year Plan," and the requirements of Beijing, all colleges and universities are actively implementing carbon emission-related measures, so that the long-awaited emission reduction projects can be implemented one after another. However, almost half of the projects, with one ton of carbon sink calculated at 40 yuan, did not meet the expectations, that is, the input and output were not positively correlated. Additionally, the income of some projects was calculated on a 3-year cumulative basis, yet the income was still lower than the cost; thus, none of the problems were in fact solved. The reasons are discussed in detail as shown in **Table 1**.

Table 1. Energy saving projects implemented by China University of Geosciences (Beijing) from 2019 to 2022 and their emission reduction effects

Year	Emission reduction projects (40 yuan for one ton of carbon sink)	Carbon dioxide emission reduction calculated at 40 yuan per ton of carbon sink, tCO_2e	Economic performance (10,000 yuan)	Met the expectations
2019	Protect green and add green	369	14.76	No
	Reconstruction of water pump and motor in boiler room and heat exchange station	1,264	50.56	Yes
	Smart classroom	1,037	41.48	No
	Energy saving platform	1,382	55.28	No
2020	Installation of solar water heater	3,756	150.24	Yes
	Reform of heating operation system in teaching area	412	16.48	Yes
	Eliminate high energy consuming equipment	653	26.12	Yes
	Reconstruction of intelligent electricity meter in student dormitory	487	19.48	Yes
2021	Water pipe upgrading	1,101	44.04	No
	Installation of LED lights in office building and teaching buildings	1,248	98.9	No
	Installation of charging pile	621	24.84	Yes
	Refuse classification	785	31.40	No
	Centralized accommodation during holidays	337	13.48	Yes

(Continued on next page)

(Continued from previous page)

Year	Emission reduction projects (40 yuan for one ton of carbon sink)	Carbon dioxide emission reduction calculated at 40 yuan per ton of carbon sink, tCO2e	Economic performance (10,000 yuan)	Met the expectations
2022	Teaching 1, teaching 2, teaching 3 transformation and upgrading	Not counted in less than a year		No
	Upgrading the energy conservation supervision platform	214	8.56	No
	Expanding the green area, and changing the types of green plants	158	6.32	No

Abbreviations: LED, light emitting diode; tCO_2e, tons (t) of carbon dioxide (CO2) equivalent (e).

As shown in **Table 1**, during the four years (2019–2022), in addition to completing a series of energy-saving transformation projects, China University of Geosciences (Beijing) passed the evaluation and gained the approval of energy-efficiency leaders of public institutions and water-saving universities; completed the energy consumption statistics, carbon emission verification and compliance, as well as energy utilization report; upgraded the software system of the energy-saving supervision platform and updated the platform user interface to a more intuitive and easy-to-use web configuration software; entrusted the hydropower center to model and arrange a special network – the energy-saving supervision platform; grasped the distribution and trend of the special network points and drew the topology map of the special network; and achieved the energy conservation goals of Haidian District in 2020 and the 13th Five Year Plan. China University of Geosciences (Beijing) passed the comprehensive supervision of Beijing Energy Conservation Supervision Brigade on energy conservation of key energy consuming units in 2021; the verification and allocation of water use indicators are completed by the Beijing Water Conservation Management Center; "double carbon" publicity and education are carried out around the establishment of green schools. At nodes such as Water Saving Publicity Week, Energy Saving Publicity Week, and Patriotic Health Campaign Month, many promotional articles on water saving, energy saving, and carbon emission reduction are published on the official account; the green house community is instructed to create a water-saving propaganda, "Water Pollution in Environmental Protection Classroom," the science on water pollution and the current situation of water pollution in China are popularized, and students are encouraged to love, cherish, and save water. In April 2022, the campus management center took the lead in carrying out the "double carbon" thematic activity of "Patriotic Health Campaign Month, Build A Beautiful Campus Together" with relevant departments and guided students in low-carbon and energy conservation with the campus carbon footprint as the main line.

4. Problem analysis

The carbon emission reduction practice of China University of Geosciences (Beijing) basically represents the average of Beijing universities. In recent years, in the process of transformation, implementation, and technological application of energy-saving projects, carbon emission reduction has achieved some results, but nearly half of the projects did not meet the expectations. The main reasons are further discussed below.

The energy consumption department has not clarified the formal, standardized, and open carbon emission inventory of the campus. Without a carbon emission inventory, it is impossible to gauge the current situation of carbon emissions, understand the potential, path, and methods of emission reduction, or scientifically and systematically formulate carbon emission indicators and accounting guidelines for carbon emissions in colleges and universities.

The energy consumption management department has not formulated any "double carbon" schedule with regard to the carbon emission and financial reality of the university. A schedule for direct carbon emissions, indirect emissions, and carbon offsets for catering centers, hot water supply, electricity operation, energy-saving platforms, academic exchanges, and travel has not been determined, thus affecting the design and implementation of carbon emission reduction strategies. Beijing University of Science and Technology should be referred to for the formulation method and implementation schedule.

The completed energy conservation projects did not meet the expectations. For example, the upgrading of the three teaching buildings, the installation of solar water heaters in student dormitories, the replacement of environmental sanitation vehicles with new energy vehicles, the replacement of lighting with LED energy-saving lamps, and the classification of waste. In order to save money, the school did not strictly comply with the campus carbon emission reduction requirements that were issued by the Ministry of Education, the Ministry of Housing and Urban Rural Development, and other relevant functional departments, in combination with the situation of the school, to achieve the expected goals. Therefore, it is necessary to broaden the fund channels and alleviate the financial pressure of colleges and universities through climate investment and financing as well as the social capital model of multi-party combination, including the government, enterprises, and universities.

There is also a dearth of professionals to achieve the "double carbon" goal. At present, China University of Geosciences (Beijing) has not introduced any courses related to "carbon neutralization" and "carbon peak." In addition, it has no relevant cross-disciplinary and professional construction, let alone "double carbon" majors and disciplines of double first-class. Due to the lack of professionals, the implementation of campus carbon emission reduction projects and the publicity and education of "double carbon" have not met the expectations. Furthermore, the carbon neutral cultural atmosphere, including personal carbon footprint, carbon credits, and carbon inclusion, has not yet taken shape. Compared with universities in developed countries, for example, Hull University in the United Kingdom, which regards campus as a "living laboratory" for energy technology innovation, one of the three key tasks of carbon neutralization [11], Chinese universities still have a long way to go in terms of "double carbon" production, learning, and research construction.

The "double carbon" heart in campus has not been formed. The Ministry of Science and Technology has taken the lead in preparing the List of Technologies to Combat Climate Change, which is a list of existing technology promotion [12]. The list focuses on the transformation and upgrading of traditional technologies, the production and application of renewable energy, technical and economic management decisions, *etc*. This is the research scope of the center. In addition, the management function of the center should involve the optimization of the "double carbon" system, implementation plan, schedule, road map, and long-term planning for the sustainable development of the school. The director of the center must be the leader of the school and make overall plans for carbon neutralization of the whole system, including teaching, scientific research, government procurement, building transformation, new energy application, *etc*. [5].

To sum up, colleges and universities should begin from reality, face the "double carbon" problem, optimize and integrate the energy management of the school with the "14th Five Year Plan" as well as the discipline development plan with the "3060" goal, make scientific deployment, ensure the development of energy use, practice the national energy conservation policies, and increase the application and promotion of mature energy-saving products and technologies. All colleges and universities should consider the situation, innovate energy management means, further promote household measurement projects, improve the coverage and expand the measurement depth of the energy supervision platform, dig deep for energy conservation and emission reduction, strengthen the school's income and saving measures, improve the input-output ratio of school energy, and effectively reduce the school's public energy expenditure. All

colleges and universities should encourage the participation of both teachers and students through system implementation, publicity, and guidance; form a joint force within the school; improve the school's management efficiency; and strengthen the capabilities of professional and technical personnel.

5. Method exploration

Based on the potential analysis of carbon emission reduction projects and the current problems, compared with the "3060" goal, the emission reduction path of universities can be analyzed.

5.1. Set a "double carbon" center

In order to focus our scattered conscious actions on major issues and complete the "double carbon" goal on schedule, colleges and universities need to set up "double carbon" centers that are led by the leaders of major universities. Only the leaders of key universities have the courage to focus on the strengths of various disciplines to carry out the inventory, management, and research of campus carbon emissions, combine the university's resource endowment and development characteristics, identify weaknesses, solve the bottleneck problem of low-carbon development, and introduce a "carbon neutral" plan, a "carbon neutral" preparation standard, a "carbon neutral" path guidance, a "carbon neutral" offset scheme design, a "carbon neutral" evaluation standard and assessment method, "carbon neutral" professional talent training, and a "carbon neutral" management and financial system, integrate the "carbon neutral" concept into school construction, as well as establish a "double carbon" special fund for carbon offset and related scientific research, teaching, and energy-saving project transformation, so as to create a diversified, promotable, and grounded "green model."

5.2. Energy-saving project transformation and collaboration

Energy conservation projects are the main body to implement the long-term emission reduction task of colleges and universities. To achieve the "dual carbon" goal, it is necessary to identify the key emission drivers, quantitatively evaluate the long-term emission reduction capacity [13], carry out bottom-up exploration and innovation project research, as well as achieve the same goal through different routes in combination with the phased characteristics of colleges and universities' own emission reduction.

5.3. Application of green technology

The science and technology support for green technology application is China's key to achieving carbon peak goal and carbon neutrality vision and participating in global climate governance [19]. The "double carbon" path applied to colleges and universities is mainly reflected in three aspects: buildings with low carbon design technology, new energy promotion technology, and application technology innovation.

5.4. Construction of an innovation platform and transformation of scientific and technological achievements

Encourage universities to build a scientific and technological innovation platform with the theme of "double carbon," a "double carbon" research center, an industrial technology innovation center or a "double carbon" teaching laboratory with the cooperation of universities, governments, enterprises, communities, disciplines, teachers, and students, so as to draw on professional advantages, solve the problem of carbon summit, promote scientific and technological innovation in the double carbon field, as well as promote the industrialization of science and technology, so as to guide the direction of development in terms of the efficient utilization of economic and social resources and green low-carbon.

5.5. "Double carbon" education diversification

The low carbon concept is not widely recognized by both teachers and students. Their zero-carbon knowledge is lacking, and their subjective awareness of "carbon neutrality" is weak. It would be difficult for a subjective low carbon cognition to play an active role in the "double carbon" goal of colleges and universities. However, there is no mature policy that can be practiced for differentiated guidance. Therefore, "dual carbon" education should be integrated into the curriculum system of various disciplines, and "dual carbon" general education courses and national quality courses should be established. Promoting the construction of "double carbon" cross-disciplines and specialties and striving to create double first-class specialties and first-class disciplines would also be beneficial. Through a series of incentive mechanisms such as carbon inclusion, carbon integral, and carbon credit, a variety of "dual carbon" publicity activities should be carried out, while creating a campus environment that embodies "dual carbon" culture and promoting carbon neutrality in large-scale events, conferences, waste classification, *etc*.

6. Conclusion

Driven by the global "3060" goal, all colleges and universities are now promoting low-carbon and zero-carbon emission reduction efforts on campus according to their own situation. However, due to the lack of involvement of university management and the coordination of various supports from both within and outside universities, the "dual-carbon" model is still being explored. China University of Geosciences (Beijing) has taken the lead in exploring this model and the continuous optimization of the scheme, hoping to help identify major emission sources and ensure that the campus carbon accounting and inventory work of greenhouse gas emissions is carried out well. According to the data provided by carbon accounting, it would be helpful to implement carbon monitoring work on major emission sources, apply technical means to optimize carbon emission design and transformation scheme, as well as optimize the roles of campus green space vegetation carbon sink and forest carbon sink.

Disclosure statement

The author declares no conflict of interest.

References

[1] Xinhua News Important Speech Delivered at the General Debate of the 75th United Nations General Assembly, 2020, viewed September 11, 2022, https://www.ccps.gov.cn/xxsxk/zyls/202009/t20200922_143558.shtml?ivk_sa=1024320u

[2] Liu M, (eds) 2021, During the 29th Collective Study, the Political Bureau of the Central Committee of the Communist Party of China Emphasized Maintaining the Strategic Focus of Ecological Civilization Construction and Striving for the Modernization of Harmonious Coexistence Between Man and Nature, viewed May 6, 2022, http://www.gov.cn/xinwen/2021-05/01/content_5604364.htm?tdsourcetag=s_pcqq_aiomsg

[3] Qiu L, (eds) 2021, During the Twenty-Ninth Collective Study of the Political Bureau of the CPC Central Committee, the Leader Emphasized Maintaining the Strategic Focus on Ecological Civilization Construction and Striving to Build a Modernization in Which Man and Nature Coexist Harmoniously, viewed May 6, 2022, http://www.xinhuanet.com/politics/leaders/2021-05/01/c_1127401181.htm

[4] Song Y, (eds) 2021, Opinions of the CPC Central Committee and the State Council on Completely, Accurately and Comprehensively Implementing the New Development Concept and Doing a Good

Job of Carbon Peak and Carbon Neutralization, viewed May 6, 2022, http://www.gov.cn/zhengce/2021-10/24/content_5644613.htm

[5] Song Y, (eds) 2021, Opinions of the Central Committee of the Communist Party of China and the State Council on Completely, Accurately and Comprehensively Implementing the New Development Concept, viewed May 6, 2022, http://www.gov.cn/zhengce/2021-10/24/content_5644613.htm

[6] Yang H, (eds) 2021, The General Office of the CPC Central Committee and the State Council issued the Opinions on Promoting the Green Development of Urban and Rural Construction, viewed May 6, 2022, http://www.gov.cn/zhengce/2021-10/21/content_5644083.htm

[7] Li M, (eds) 2022, The State Council issued the "Fourteenth Five Year" Comprehensive Work Plan for Energy Conservation and Emission Reduction, viewed May 6, 2022, http://www.gov.cn/xinwen/2022-01/24/content_5670214.htm

[8] Lu H, (eds) 2021, Statistical Bulletin of the People's Republic of China on National Economic and Social Development in 2020, viewed May 9, 2022, http://www.gov.cn/shuju/2021-02/28/content_5589283.htm

[9] Qi Y, Stern N, He J-K, et al., 2020, The Policy-Driven Peak and Reduction of China's Carbon Emissions. Advances in Climate Change Research, 11(2): 65–71.

[10] Wang Y, Xu S, Qi R, 2021, On the Framework of Carbon Neutral Planning in Colleges and Universities. Journal of China University of Geosciences (Social Science Edition), 2021(6): 6–14.

[11] Zou R, Zhang C, Fang T, et al., 2017, Research on the Low Carbon Construction Strategy of University Campus in Cold Regions Based on Carbon Balance Accounting. China's Population, Resources and Environment, 2017 (4): 140–150.

[12] Dietz T, Gardner G T, Gilligan J, et al., 2009, Household Actions Can Provide a Behavioral Wedge to Rapidly Reduce US Carbon Emissions. Proceedings of the National Academy of Sciences of the United States of America, 106(44): 18452–18456.

[13] Wang C, 2021, Low Carbon Transformation Under the Vision of Carbon Neutrality. China Environmental Management, 2021(1): 13–15.

Publisher's note

Bio-Byword Scientific Publishing remains neutral with regard to jurisdictional claims in published maps and institutional affiliations.

Journal of Contemporary Educational Research, 2022, Volume 6, Issue 12
http://ojs.bbwpublisher.com/index.php/JCER
ISSN Online: 2208-8474
ISSN Print: 2208-8466

Art and Life of Manchu Paper-Cut Artist Ni Youzhi

Lin Tong*

Northeast Normal University, Changchun 130117, Jilin Province, China

***Corresponding author:** Lin Tong, 370465044@qq.com

Copyright: © 2022 Author(s). This is an open-access article distributed under the terms of the Creative Commons Attribution License (CC BY 4.0), permitting distribution and reproduction in any medium, provided the original work is cited.

Abstract: The advice to "disclose the family business to no one" has remained in my mind for a long time. It influenced how I perceived the works of Ni Youzhi, a paper-cut artist, which are shrouded in mystery and marked with her family's hue. I certainly feel proud and understand the sense of mission for this inheritance that has been passed down from generation to generation [2]. However, her Manchu paper-cut changed dramatically over time despite my best efforts to preserve this "heirloom" [3]. Looking back on her journey of creation, her trajectory of inheritance, creation, transformation, and regression was marked clearly.

Keywords: Manchu paper-cutting; Changbai Mountain; China's intangible cultural heritage; Paper-cut art; Art

Online publication: December 27, 2022

1. Introduction

Hazy was the memory of my first time picking up a scissors in an attempt to help my grandmother, who was threading a needle on a heatable brick bed, also known as "kang" in Chinese [1]. "Miaomiao, how about I teach you our unique kind of paper-cutting, passed down in the family? But you have to promise that you will reveal it to no one," she said, while picking up a piece of paper and a pair of scissors as I was trying to get my job done. "Here is how to make the feet, the gown, and the fingers of different lengths. Remember, men have square mouths, and we have small ones…," she explained with her head lowered, while having her hands on the work. That was my first Momo, a paper-cut model of the ancestors worshiped by the Manchu people, and also my first class on paper-cutting: a man in a mandarin jacket with braids on top of his head. Apart from the image, the advice to "disclose the family business to no one" has remained in my mind for a long time. This advice also influenced how I perceived Ni Youzhi, a paper-cut artist, and her works, which are shrouded in mystery and marked with her family's hue. I certainly feel proud and understand the sense of mission for the inheritance passed down from generation to generation [2]. However, her Manchu paper-cut changed dramatically over time, despite my best efforts to preserve this "heirloom" [3]. Looking back on her journey of creation, her trajectory of inheritance, creation, transformation, and regression is clearly marked.

2. Inheritance

Ni believes that this "hereditary treasure" is primarily based on "Momo" of all ages and both genders, "Turtle," "Frog," and the back-necked deer (**Figure 1–3**). The challenge has already been tackled once an individual learns to master them. Even to this day, she still turns to one of these paper-cuts for reference to clear my doubts whenever I have any [4]. More than the basics, they are the foundation and the footstone she built and developed from childhood. Although I have not witnessed the exact process, many times have she told the story that has now been embalmed in my mind [5].

Figure 1. 1982, "Momo"

(A) (B)

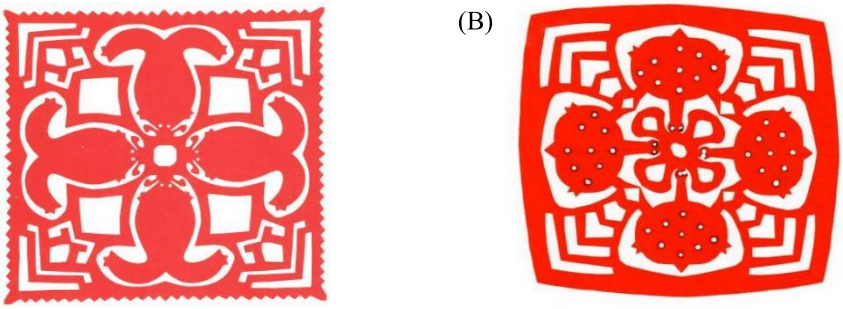

Figure 2. (A) 1982, "Frog"; (B) 1982, "Turtle"

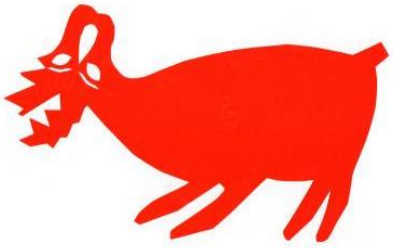

Figure 3. 1982, Back-necked deer

Paper-cutting has become a part of her life as this practice can be tracked back to her childhood, where she would cut out small figures of people, "Turtle," "Frog," and other animals every Chinese New Year to show and pray for good fortune in days to come in addition to those done on weekdays [6]. Raised and edified therefrom, the art of Manchu paper-cut that was inherited from her grandmother has been deeply rooted in her heart and completely passed down as a matter of course. Until 1955, when 15-year-old Ni attended elementary school, she temporarily bid farewell to paper-cutting. Like an ordinary woman, she got married and had children. After nearly 30 years, she picked up the craft of scissors once again [7]. It was an art exhibition held at Tonghua Cultural Center that intrigued her, for which she scissored out works of "Turtle," "Frog," and "Momo" by memory. Rough and concise were they, and also highly generalized. They, without any "trim," were less decorated, folded in four, and cut in half. The eyes were burned out with incense. The resulting traces of smoke around the eyes shaped a simple and elegant atmosphere, exuding strong original taste. The works were appreciated by Wang Chunxin, a curator at Tonghua City Art Museum. As a result, the gap of Manchu paper-cutting in this Chinese folk art was made up for. Accordingly, Ni became the first Manchu folk paper-cut artist known by the public [8].

"Turtle" and "Frog" are animal gods in Manchu belief. With regard to the back-necked deer, the bold and clear lines go nicely with the plum blossom spots burned by incense [9]. The dauntless and exaggerated shape, to be precise, the upward lips, upside-down head, and the four legs on the same plane bending forwards gave me a thought that my grandma might have cut it wrong. However, when I asked her why the

legs of deer were bent in the opposite direction, she laughed and said, "It's the art of paper-cutting, trying to make it as natural as though it were living, but not exactly." Circulating sayings have it that they are always mounted on the walls of Manchu people during Chinese New Year for auspiciousness [10].

The unadorned "Momo" retains the original traditional taste and flavor. It takes images from typical Manchu costumes: long robes and mandarin jackets, women's flag flower crowns, and men's braids that stand on their heads rather than being folded down [11]. The way of folding it in half makes them stand in that manner. In virtue of techniques of Yin, of cutting off the pattern itself, there go round eyes, square mouth, triangular nose, drooping hands, separated fingers, and a full head. [12]

There is no specific point where inheritance stops. The inheritance goes far beyond the image and lies in the spirit and culture [13]. Hence, not a second have Ni given up on her persistence in embodying the Manchu culture and the unique national spirit of the northern region in her paper-cut works, neither in the creative period nor in the later latent stage [14].

3. Creation

Manchu paper-cutting in Changbai Mountain shares the limelight for works of "Turtle," "Frog," the back-necked deer, and "Momo," which earned her praise and motivated her to pick up the tool and continue to create. Ceasing to advance was not an option, as repeating the tradition would not satisfy her in paper-cut creation. She pursued innovation and development [15]. The year of 1983 opened up the stage of creation. Relying on her memories and life experience, she created thousands of paper-cut works based on the folk customs experienced and Manchu folklore that is usually passed down orally. These outputs better reflected her creativity, and it is also during this period that made her a real Manchu paper-cut artist [16].

Between 1983 and 1996, Ni successively took part in the joint exhibition of new paper-cut works from 25 provinces across the country that was held in Beijing; joined the Jilin Provincial Folk Painting and Calligraphy Research Association as a director; and appeared in the first Chinese folk culture and art exhibition. Her work "Ginseng Story" (**Figure 4**) was selected to be displayed at China Folk Art Exhibition and was also sent to Malmö, Sweden for exhibition. During this period, countless works were born, including "Ginseng Story," "Old Couple and Young Couple," and "Fetching the Bride" [17].

Figure 4. 1999, "Ginseng Story"

In 1996, a crucial year of her creation, her family that housed many children was in a difficult situation. Seven or eight of them crowded together in a house of over 60 square meters. At this time, there happened to be a house in the scenic area of Wanwanchuan. It was not big but enough to grow vegetables and raise poultry [18]. So, she and her husband moved there as they both enjoyed the beautiful scenic spot. They spent

over five years living a peaceful and secluded life. The picturesque scenery attracted many people during summer, but few in autumn and winter. Such a quiet environment made a hotbed for artistic creation. She integrated her previous paper-cut works and continued to create new ones. During that several years while living in Wanwanchuan, she created nearly 2,000 pieces [19].

In 1998, her attitude of "revealing the art to no one" changed. She was employed by Tonghua Experimental Primary School as a paper-cut instructor, and she began to teach paper-cut skills. She also became more involved in paper-cutting activities. Prior to this, she had never drafted before cutting; instead, she just visualized her craft in her mind. While teaching students, she began to draw before cutting. Her drawings were as rough and simple as her paper-cutting. In June 2003, she hosted a podium in Tonghua Normal University to teach paper-cutting to college students.

In the course of teaching, her painting consciousness gradually emerged, which is referred to as a transformation from instinctive to subjective creation. Her self-awareness in paper-cutting grew stronger. Themes of creation were no longer limited to stories from memories and traditional customs of the past, thus leaving a profound impact on her later paper-cutting works.

In addition to the Manchu folklore passed down orally and the folk customs experienced, a small number of her paper-cut works, which are not mainstream, embodied her strong self-awareness. She began to pay attention to her surroundings and modern times, as proved by her following works.

In addition to individual works such as "Momo," "Guaqian," a paper-cut with tassels pasted on the door and window during New Year, impressed me the most during my childhood. Before New Year, my grandma would always ride her bicycle to send us some of these paper-cuts in different colors. It looked good when pasted on the lintel with the couplets. However, she did not cut these anymore, and since then, I never saw them again. I only vaguely remember that there were many money patterns. When I was in college, I asked her about "Guaqian." She explained that her works on the subject usually contained some auspicious patterns, such as fish (for a prosperous year to come), the word "Fu," or the Chinese zodiac of the year, with money patterns applied as decoration on both sides or the lower end. Her fondness for Guaqian pattern is evident not only in "Guaqian," but also in many folk scene paper-cuts, such as "Fetching the Bride" and "Old Couple and Young Couple." Whenever she cuts the money pattern, she often says, "Money paves the ground, and there awaits good luck." I believe this not only fits the meaning of the work itself, but also perhaps a form of expectation for a happy life. Stories about "Guaqian" have come to an end, so have the works that have not been seen by the public [20].

In terms of folklore, there are representative works, such as "Legend of the Three Fairies," "Old Mushroom and His Goddaughter," "Disguising Sisters," "Story of the Calf," "Ginseng Girl Hitching a Car," "Legend of Nurhachi," *etc*.

In terms of customs, there are representative works based on the local practices of the Manchu people, such as "Shaman," "Origin of Artemisia: Artemisia on Dragon Boat Festival," "Respecting Smoke," "Old Couple and Young Couple," "Fetching the Bride," *etc*. (**Figure 5**).

(A)

(B)

Figure 5. (A) 1990, "Origin of Artemisia: Artemisia on Dragon Boat Festival"; (B) 2002, "Fetching the Bride"

"Visiting the Parental Home," "Traffic Post," "Respecting the Elderly and Caring for the Young," *etc*. depict life in the modern society. "Visiting the Parental Home" highlights the contrast between the old and the new society in the matter of such custom. The images of holding a handbag and sitting in a car form a sharp contrast, indicating the transition of times. The paper-cut work "Traffic Post" follows a real handling process of a traffic violation incident that she came across when she was waiting at a red light on her way home. "Respecting the Elderly and Caring for the Young," on the other hand, comprises pictures revolving around "harmony" and "care."

She later created a series of works called "Goguryeo Gods and Beasts Face Makeup" (**Figure 6**), which was presented to the world during Ni Youzhi's 70th Anniversary Retrospective Exhibition in 2014, totaling 108 pieces.

Figure 6. 2009, **"**Goguryeo Gods and Beasts Face Makeup"

4. Transformation and regression

Ni's grandma had an immeasurable influence on her, both in paper-cutting and in life. Her grandmother, a Manchu, was a Christian; thus, following her footsteps, Ni is a Christian. She became particularly devout and strong in her religious belief after she experienced severe psychological trauma. In 2005, her eldest son passed away after being bedridden for many years due to a brain injury from an accident, which left her with a heavy blow. Back then, she prayed every day and went to church every week for spiritual sustenance. She then gradually stepped out of the shadows. Since then, she began to cover religious themes and created paper-cuts focusing on Jesus by referring to the graphic version of "Bible Stories." At this time, influenced by several religious paintings, her paper-cut style made a sharp turn.

Since 2012, her mind has been at a state of peace. Although what she had experienced influenced her life, her love for paper-cutting has remained firm. She turned to her paper-cutting world and continued to create. Hardships made her clearer about her paper-cutting path. She invested efforts to the source and carried out research and innovation on her "Momo" series. In 2013, she was honored with the "National Intangible Cultural Heritage Manchu Paper-cut Inheritor" award. One year later in 2014, she held her first personal paper-cut exhibition "Ni Youzhi's 70th Anniversary Retrospective Exhibition of The First Person of Manchu Paper-Cut" at Changchun Ark Art Museum.

"I hope to impart my paper-cuts to more people, so that even if I die one day, my paper-cuts will still be there," she said in a promotional video titled "Interview with the Artist – Ni Youzhi" by Changchun Ark Art Museum. Throughout her journey, she made transformed her "family business" into a "hand-down property" by the state. Those 70 years or even longer of paper-cut life made Ni Youzhi, an ordinary woman, respectable, not only because of her achievements in paper-cut art, but also her contributions to the society! In 2016, an incident of fall has put her bedridden until now. Despite an advanced age and her sufferings from many illnesses, she devotes herself to creating and spares no efforts to promote the national culture through paper-cutting.

Disclosure statement

The author declares no conflict of interest.

References

[1] Feng J, 2009, Collection of Chinese Folk Paper Cutting – West Henan Volume, Hebei Education Press, Hebei.

[2] Feng J, 2009, Collection of Chinese Folk Paper Cutting – North Henan Volume, Hebei Education Press, Hebei.

[3] Feng J, 2009, Collection of Chinese Folk Paper Cutting – Yiwulv Mountain Volume, Hebei Education Press, Hebei.

[4] Feng J, 2009, Collection of Chinese Folk Paper Cutting – West Henan Volume, Hebei Education Press, Hebei.

[5] Feng J, 2009, Collection of Chinese Folk Paper Cutting – Weixian Volume, Hebei Education Press, Hebei.

[6] Feng J, 2009, Collection of Chinese Folk Paper Cutting – HuXiang Volume, Hebei Education Press, Hebei.

[7] Qiao X, 2004, Life and Art of Inheritors of Chinese Folk Paper Cutting Genius, Shanxi People's Publishing House, Shaanxi.

[8] Qiao X, 2010, Empty Flowers: Research and Creation on Paper Cutting, Shandong Fine Arts Publishing House, Shandong.

[9] Wang J, Wang C, 2004, Research on Shaman Paper Cutting, Times Literature and Art Publishing House, Jilin.

[10] Wang C, Yin G, 2000, Jilin Folk Art, Jilin Art Publishing House, Jilin.

[11] Guo SY, Wang QG, 2001, The Living Shaman, Liaoning Fine Arts Publishing House, Liaoning.

[12] Su RT, 2000, Primitive Art of Hunting Nationalities, Inner Mongolia Culture Press, Inner Mongolia.

[13] Liu B, 2011, Research on the Symbol Configuration of Folk Arts Modeling in Commercial Propaganda. Packaging Engineering, 32(8): 97–99.

[14] Guo SY, 2001, Perspective of Shamanism in Primitive Living Culture, Shanghai People's Publishing House, Shanghai.

[15] Fu YG, 2000, Shaman Theory, Liaoning People's Publishing House, Liaoning.

[16] Ly DJ, 1999, Inheritance of the Original Religious Materials of Chinese Nationalities, China Social Science Press, Beijing.

[17] Xing L, 1995, Chinese Women's Folk Culture, China Archives Publishing House, Beijing.

[18] Zhang FG, 2000, Chinese and Foreign Paper Cutting Art, Liaoning Fine Arts Publishing House, Liaoning.

[19] Zhang XR, Chen BL, Gu WS, et al., 1999, A Study on the Economy and Culture of Fishing and Hunting in Northern China, Jilin Fine Arts Publishing House, Jilin.

[20] Zhao Z, 1993, Research on Manchu Culture and Religion, Liaoning Fine Arts Publishing House, Liaoning.

Publisher's note

Bio-Byword Scientific Publishing remains neutral with regard to jurisdictional claims in published maps and institutional affiliations.

Author Guidelines

Before your submission, please check that your manuscript has been prepared in accordance to the step-by-step instructions for submitting a manuscript to our online submission system. We recommend that you keep this page open for your reference as you move through the submission process.

If there are any differences in author guidelines between the print and online version, it is recommended that authors refer to the online version for use.

Manuscript Format

Journal of Contemporary Educational Research accepts manuscript that is in MS Word or LaTeX format. All manuscripts must be written in clear, comprehensible English. Both American and British English are acceptable. Usage of non-English words should be kept to a minimum and all must be italicized (except for e.g. and i.e.) If you have concerns about the level of English in your submission, please ensure that it is proofread before submission by a native English speaker or a scientific editing service.

Cover letter

All submissions for *Journal of Contemporary Educational Research* should include a cover letter as a separate file. A cover letter should contain a brief explanation of what was previously known, the conceptual advancement with the findings and its significance to broad readership. The cover letter is confidential and will be read only by the editors. It will not be seen by reviewers.

Title

The title should capture the conceptual significance for a broad audience. The title should not be more than 50 words and should be able to give readers an overall view of the paper's significance. Titles should avoid using uncommon jargons, abbreviations and punctuation.

List of Authors

The names of authors must be spelled out rather than set in initials with their affiliations footnoted. Authors should be listed according to the extent of their contribution, with the major contributor listed first. All corresponding authors (maximum 2) should be identified with an asterisk. Affiliations should contain the following core information: department, institution, city, state, postal code, and country. For contact, email address of only one corresponding author is expected within the manuscript. Please note that all authors must see and approve the final version of the manuscript before submitting.

Abstract

Articles must include an abstract containing a maximum of 200 words. The purpose of abstract is to provide sufficient information for a reader to choose either to proceed to the full text of the article. After the abstract, please give 3-8 key words; please avoid using the same words as those already used in the title.

Section Headings

Please number all section headings, subheadings and sub-subheadings. Use boldface to identify major headings (e.g. **1**, **2**, **3**, etc.) and subheadings (e.g. **1.1**, **1.2**, **2.1**, **2.2** etc.) For the sub-subheadings, please distinguish it further using non-boldface numbers in parenthesis (e.g. (1), (2), (3), etc.)

Introduction

Introduction should provide a background that gives a broad readership an overall outlook of the field and the research performed. It tackles a problem and states its important regarding with the significance of the study. Introduction can conclude with a brief statement of the aim of the work and a comment about whether that aim was achieved.

Materials and Methods

This section provides the general experimental design and methodologies used. The aim is to provide enough detail to for other investigators to fully replicate your results. It is also required to facilitate better understanding of the results obtained. Protocols and procedures for new methods must be included in detail to reproduce the experiments.

Ethics

Ethics information, including IACUC permit numbers and/or IRB name, if applicable. This information should be included in a subheading labelled "Ethics Statement" in the "Methods" section of your manuscript file, in as much detail as possible.

Results

This section can be divided into subheadings. This section focuses on the results of the experiments performed.

Discussion

This section should provide the significance of the results and identify the impact of the research in a broader context. It should not be redundant or similar to the content of the results section.

Conclusion

Please use the conclusion section for interpretation only, and not to summarize information already presented in the text or abstract.

Conflict of Interest

All authors are required to declare all activities that have the potential to be deemed as a source of competing interest in relations to their submitted manuscript. Examples of such activities could include personal or work-related relationships, events, etc. Authors who have nothing to declare are encouraged to add "No conflict of interest was reported by all authors" in this section.

Funding

Authors should declare all financial and non-financial support that have the potential to be deemed as a source of competing interest in relations to their submitted manuscript in this section. Financial supports are generally in the form of grants, royalties, consulting fees and more. Examples of non-financial support could include the following: externally-supplied equipments/biological sources, writing assistance, administrative support, contributions from non-authors etc.

Appendix

This section is optional and is for all materials (e.g. advanced technical details) that has been excluded from the main text but remain essential to readers in understanding the manuscripts. This section is not for supplementary figures. Authors are advised to refer to the section on 'Supplementary figures' for such submissions.

Text

The text of the manuscript should be in Microsoft Word or Latex. The length of the manuscript cannot be more than 50000 characters (inclusive of spaces) or approximately 7000 words.

Nomenclature for genes and proteins

This journal aims to reach researchers all over the globe. Hence, for both reviewers' and readers' ease in comprehension, authors are highly encouraged to use the appropriate gene and protein nomenclature. Authors may prefer to utilize resources such as http://www.ncbi.nlm.nih.gov/gene

Figures

Authors should include all figures into the manuscript and submit it as 1 file in the OJS system. Reference to the "Instructions for Typesetting manuscript" is strongly encouraged. Figures include photographs, scanned images, graphs, charts and schematic diagrams. Figures submitted should avoid unnecessary decorative effects (e.g. 3D graphs) as well as be minimally processed (e.g. changes in

brightness and contrast applied uniformly for the entire figure). It should also be set against a white background. Please remember to label all figures (e.g. axis etc.) and add in captions (below the figure) as required. These captions should be numbered (e.g. **Figure 1**, **Figure 2**, etc.) in boldface. All figures must have a brief title (also known as caption) that describes the entire figure without citing specific panels, followed by a legend defined as description of each panel. Please identify each panel with uppercase letters in parenthesis (e.g. A, B, C, etc.)

The preferred file formats for any separately submitted figure(s) are TIFF or JPEG. All figures should be legible in print form and of optimal resolution. Optimal resolutions preferred are 300 dots per inch for RBG coloured, 600 dots per inch for greyscale and 1200 dots per inch for line art. Although there are no file size limitation imposed, authors are highly encouraged to compress their figures to an ideal size without unduly affecting legibility and resolution of figures. This will also speed up the process of uploading in the submission system if necessary.

The Editor-in-Chief and Publisher reserve the right to request from author(s) the high-resolution files and unprocessed data and metadata files should the need arise at any point after manuscript submission for reasons such as production, evaluation or other purposes. The file name should allow for ease in identifying the associated manuscript submitted.

Tables, lists and equations

Tables, lists and equations must be submitted together with the manuscript. Likewise, lists and equations should be properly aligned and its meaning clear to readers. Tables created using Microsoft Word table function are preferred. Place each table in your manuscript file right after the paragraph in which it is first cited. Do not submit your tables in separate files. The tables should include a concise but sufficiently explanatory title at the top. Vertical lines should not be used to separate columns. Leave some extra space between the columns instead. All tables should be based on three horizontal lines to separate the caption, header and body. A few additional horizontal lines MAY be included as needed (example below). Any explanations essential to the understanding of the table should be given in footnotes at the bottom of the table. SI units should be used.

Supplementary information

This section is optional and contains all materials and figures that have been excluded from the entire manuscript. This information are relevant to the manuscript but remains non-essential to readers' understanding of the manuscript's main content. All supplementary information should be submitted as a separate file in Step 4 during submission. Please ensure the names of such files contain 'suppl. info'.

In-text citations

Reference citations in the text should be numbered consecutively in superscript square brackets. Some examples:

1. Negotiation research spans many disciplines [3, 4].
2. This result was later contradicted by Becker and Seligman [5].
3. This effect has been widely studied [1–3, 7].

Personal communications and unpublished works can only be used in the main text of the submission and are not to be placed in the Reference section. Authors are advised to limit such usage to the minimum. They should also be easily identifiable by stating the authors and year of such unpublished works or personal communications and the word 'Unpublished' in parenthesis.

E.g. (Smith J, 2000, Unpublished)

References

This section is compulsory and should be placed at the end of all manuscripts. Do not use footnotes or endnotes as a substitute for a reference list. The list of references should only include works that are cited in the text and that have been published or accepted for publication. Personal communications and unpublished works should be excluded from this section.

For references in reference list, all authors must be stated. Authors referenced are listed with their surname followed by their initials. All references should be numbered (e.g. 1. 2. 3. etc.) and sequenced according to the order it appears as an in-text citation. References should follow the following pattern: Author(s) followed by year of publication, title of publication, full journal name in italics, volume number, issue number in parenthesis, page range and lastly the DOI (if applicable). If the referred article has more than three authors, list only the first three authors and abbreviate the remaining authors to italicized 'et al.' (meaning: "and others").

Journal

Journal article (print) with one to three authors

[1] Yao Y., Xia B. Application of Phase Frequency Feature Group Delay Algorithm in Database Differential Access. Computer Simulation, 2014, 31(12): 238-241.

Journal article (print) with more than three authors

[2] Gamelin F.X., Baquet G., Berthoin S., et al. Effect of high intensity intermittent training on heart rate variability in prepubescent children. European Journal of Applied Physiology, 2009, 105: 731–738.

Journal article (online) with one to three authors

[3] Jackson D., Firtko A., Edenborough M. Personal resilience as a strategy for surviving and thriving in the face of workplace adversity: a literature review. Journal of Advanced Nursing, 2009, 60(1): 1–9,

Journal article (online) with more than three authors

[4] Hargreave M., Jensen A., Nielsen T.S.S., et al. Maternal use of fertility drugs and risk of cancer in children—A nationwide population-based cohort study in Denmark. International Journal of Cancer, 2015, 136(8): 1931–1939.

Book

Book with one to three authors

[5] Schneider Z., Whitehead D., Elliott D. Nursing and midwifery research: methods and appraisal for evidence-based practice. 3rd edn. 2009, Elsevier Australia, Marrickville, NSW.

Book with more than three authors

[6] Davis M., Charles L., Curry M.J., et al. Challenging spatial norms. 2013, Routledge, London.

Chapter or Article in Book

[7] Knowles M.S. Independent study. In Using learning contracts. 1986, Jossey-Bass, San Francisco, 89–96.

Others

Proceedings of meetings and symposiums, conference papers

[8] Chang S.S., Liaw L. and Ruppenhofer J. (eds). Proceedings of the twenty-fifth annual meeting of the Berkeley Linguistics Society, February 12–15, 1999: general session and parasession on loan word phenomena. 2000, Berkeley Linguistics Society, Berkeley.

Conference proceedings (from electronic database)

[9] Bukowski R.M. Prognostic factors for survival in metastatic renal cell carcinoma: update 2008. Innovations and challenges in renal cancer: proceedings of the third Cambridge conference. Cancer, 2009, 115 (10): 2273, viewed 19 May 2009, Academic OneFile database.

Online Document with author names

[10] Este J., Warren C., Connor L., et al. Life in the clickstream: the future of journalism, Media Entertainment and Arts Alliance, 2008. viewed 27 May 2009, http://www.alliance.org.au/documents/foj_report_final.pdf

Online Document without author name

[11] Developing an argument n.d., viewed March 30 2009, http://web.princeton.edu/sites/writing

/Writing_Center/WCWritingResources.htm

Thesis/Dissertation

[12] Gale L. The relationship between leadership and employee empowerment for successful total quality management. 2000, University of Western Sydney.

Standard

[13] Standards Australia Online. Glass in buildings: selection and installation. AS 1288–2006. 2006, SAI Global database.

Government Report

[14] National Commission of Audit. Report to the Commonwealth Government, Australian Government Publishing Service, 1996, Canberra.

Government report (online)

[15] Department of Health and Ageing. Ageing and aged care in Australia, 2008, viewed 10 November 2008, http://www.health.gov.au/internet/main/publishing.nsf/Content/ageing

No author

[16] Guide to agricultural meteorological practices. 2nd edn, Secretariat of the World Meteorological Organization, 2010, Geneva.

Note: When referencing an entry from a dictionary or an encyclopedia with no author there is no requirement to include the source in the reference list. In these cases, only cite the title and year of the source in-text. For an authored dictionary/encyclopedia, treat the source as an authored book.

Submission Preparation Checklist

As part of the submission process, authors are required to check off their submission's compliance with all of the following items, and submissions may be returned to authors that do not adhere to these guidelines.

1. The submission has not been previously published, nor is it before another journal for consideration (or an explanation has been provided in Comments to the Editor).

2. The submission file is in OpenOffice, Microsoft Word, RTF, or WordPerfect document file format.

3. Where available, URLs for the references have been provided.

4. The text is single-spaced; uses a 12-point font; employs italics, rather than underlining (except with URL addresses); and all illustrations, figures, and tables are placed within the text at the appropriate points, rather than at the end.

5. The text adheres to the stylistic and bibliographic requirements outlined in the Author Guidelines, which is found in About the Journal.

6. If submitting to a peer-reviewed section of the journal, the instructions in Ensuring a Blind Review have been followed.

Integrated Services Platform of International Scientific Cooperation

Innoscience Research (Malaysia), which is global market oriented, was founded in 2016.Innoscience Research focuses on services based on scientific research. By cooperating with universities and scientific institutes all over the world, it performs medical researches to benefit human beings and promotes the interdisciplinary and international exchanges among researchers.

Innoscience Research covers biology, chemistry, physics and many other disciplines. It mainly focuses on the improvement of human health. It aims to promote the cooperation, exploration and exchange among researchers from different countries. By establishing platforms, Innoscience integrates the demands from different fields to realize the combination of clinical research and basic research and to accelerate and deepen the international scientific cooperation.

Cooperation Mode

Clinical Workers

In-service Doctors

Foreign Researchers

Hospital

University

Scientific institutions

BIQ-BYWORD
SCIENTIFIC PUBLISHING PTY LTD

OUR JOURNALS

The *Journal of Architectural Research and Development* is an international peer-reviewed and open access journal which is devoted to establish a bridge between theory and practice in the fields of architectural and design research, urban planning and built environment research.

Topics covered but not limited to:

- Architectural design
- Architectural technology, including new technologies and energy saving technologies
- Architectural practice
- Urban planning
- Impacts of architecture on environment

Journal of Clinical and Nursing Research (JCNR) is an international, peer reviewed and open access journal that seeks to promote the development and exchange of knowledge which is directly relevant to all clinical and nursing research and practice. Articles which explore the meaning, prevention, treatment, outcome and impact of a high standard clinical and nursing practice and discipline are encouraged to be submitted as original article, review, case report, short communication and letters.

Topics covered by not limited to:

- Development of clinical and nursing research, evaluation, evidence-based practice and scientific enquiry
- Patients and family experiences of health care
- Clinical and nursing research to enhance patient safety and reduce harm to patients
- Ethics
- Clinical and Nursing history
- Medicine

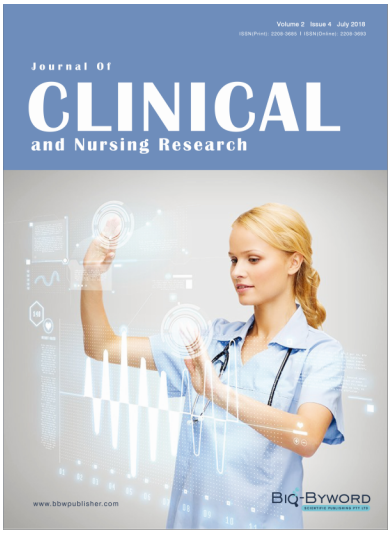

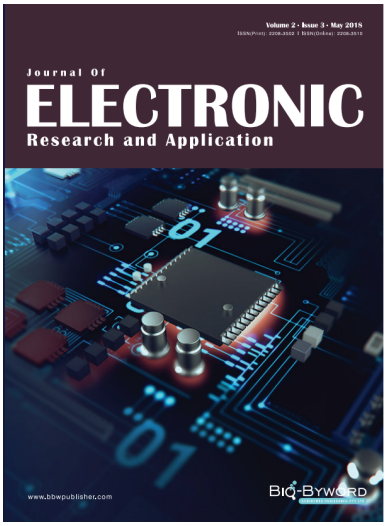

Journal of Electronic Research and Application is an international, peer-reviewed and open access journal which publishes original articles, reviews, short communications, case studies and letters in the field of electronic research and application.

Topics covered but not limited to:

- Automation
- Circuit Analysis and Application
- Electric and Electronic Measurement Systems
- Electrical Engineering
- Electronic Materials
- Electronics and Communications Engineering
- Power Systems and Power Electronics
- Signal Processing
- Telecommunications Engineering
- Wireless and Mobile Communication